USER MANUAL

UNIVERSAL INTERFACE



1 About the Document 4
1.1 Purpose of the Guide 4
1.2 Legal Notice 4
2 Safety Information 4
2.1 General Safety Information 4
2.2 Specialist Personnel Requirements 5
2.3 Proper Use of the Device 5
2.4 SELV Safety Note 5
3 Product Description 5
3.1 Device Description 5
3.2 Product Models 6
3.3 Functions 6
3.4 Technical Information 7
3.5 Dimension Drawing 7
3.6 Connection Diagram 8
4 Installation and Setup 8
4.1 Installation Information 8
4.2 Wall-Mount Installation 9
4.2.1 Installation Process 9
4.3 Removing from the Wall-Mounted Box 10
4.3.1 Removal Procedure Steps 10
5 Commissioning 10
5.1 Commissioning Prerequisites 10
5.2 Secure Commissioning with KNX Data Secure 11
5.2.1 Project Password 11
5.2.2 FDSK – Factory Default Setup Key 11
5.3 Initial Startup and Default Settings 11
5.4 Operating the Device 11
5.5 Physical Address Assignment 12
5.5.1 Step-by-step assignment process: 12
5.6 Application Download 12
6 Features 12
6.1 Device Features 12
6.2 ETS Parameters 13
6.2.1 General Settings 13
6.2.1.1 Device Type 13
6.2.1.2 Alive Beacon Function 13
6.2.1.2.1 Time Interval 13
6.2.1.3 Number of Logic Modules 13
6.2.2 Input Configuration 14
6.2.2.1 Module Name 14
6.2.2.2 Input Function 15
6.2.2.3 Lock Object 15
6.2.2.3.1 Switching 16
6.2.2.3.1.1 Input Press Action 16
6.2.2.3.1.2 Input Release Action 16
6.2.2.3.2 Dimming 17
6.2.2.3.2.1 Command on Pressing The Button 17
6.2.2.3.2.2 Dimming Darker By 17
6.2.2.3.2.3 Brighter Dimming Value 17
6.2.2.3.2.4 Telegram Stop 17
6.2.2.3.2.5 Time Between Switching and Dimming 17
6.2.2.3.3 Shutter/Blind 18
6.2.2.3.3.1 Function of Shutter Button 18
6.2.2.3.3.2 Operation Concept 18
6.2.2.3.4 Scene 19
6.2.2.3.4.1 Scene Number 19
6.2.2.3.4.2 Long Press Operation Enable 19
6.2.2.3.4.3 Long Press Operation 19
6.2.2.3.4.4 Long Press Time 19
6.2.2.3.5 Value 20
6.2.2.3.5.1 Sending Value Count 20
6.2.2.3.5.2 Operation Concept 20
6.2.2.3.5.3 1. Object Type 20
6.2.2.3.5.4 1. Object Value 20
6.2.2.3.5.5 2. Object Type 20
6.2.2.3.5.6 2. Object Value 20
6.2.2.3.6 Counter 21
6.2.2.3.6.1 Counter Mode 21

6.2.2.3.6.2 Counter Increment Value....21
6.2.2.3.6.3 Counter Size....21
6.2.2.3.6.4 Counter Set Value....21
6.2.2.3.6.5 Counter Value Send Type....22
6.2.2.3.6.6 Counter Overflow Reaction....22
6.2.2.3.6.7 Send Overflow Notification....22
6.2.2.3.7 Mode Selection....23
6.2.2.3.7.1 Short Press Operation....23
6.2.2.3.7.2 Use Long Press....23
6.2.2.3.7.3 Long Press Operation Mode....23
6.2.2.3.7.4 Long Press Time....23
6.2.2.3.8 Command Sequence....24
6.2.2.3.8.1 Object X Type....24
6.2.2.3.8.2 Sequence X Status....24
6.2.2.3.8.3 Sequence X Object X Value....24
6.2.2.3.8.4 Long Press Operation....24
6.2.2.3.8.5 Long Press Time....24
6.2.2.3.8.6 Reaction After Last Sequence....24
6.2.2.3.8.7 Contact Type....24
6.2.2.3.8.8 Use Reset Object....24
6.2.2.3.8.9 Delay Usage....25
6.2.2.3.8.10 Delay Time....25
6.2.2.3.9 Temperature Sensor....26
6.2.2.3.9.1 Temperature Sensor Calibration....26
6.2.2.3.9.2 Temperature Sending Type....26
6.2.2.3.9.3 Low Alarm Value....26
6.2.2.3.9.4 High Alarm Value....26
6.2.2.3.10 Resistor....27
6.2.2.3.10.1 Resistor Calibration....27
6.2.2.3.10.2 Resistor Sending Type....27
6.2.2.3.10.3 Low Alarm Value....27
6.2.2.3.10.4 High Alarm Value....27
6.2.2.3.11 RGB....28
6.2.2.3.11.1 RGB Value....28
6.2.2.3.11.2 Use Long Press....28
6.2.2.3.11.3 Long Press RGB Value....28
6.2.2.3.11.4 Long Press Time....28
6.2.2.3.11.5 Object Type....28
6.2.2.3.12 RGBW....29
6.2.2.3.12.1 RGBW Value....29
6.2.2.3.12.2 Object Type....29
6.2.2.3.12.3 White Value....29
6.2.2.3.12.4 Long Press Usage....29
6.2.2.3.12.5 Long Press RGBW Value....29
6.2.2.3.12.6 Long Press White Value....29
6.2.2.3.12.7 Long Press Time....29
6.2.2.3.12.8 Lowest White Value....29
6.2.2.3.12.9 Highest White Value....29
6.2.2.3.13 LED Output....30
6.2.2.3.13.1 Flash Function....30
6.2.2.3.13.2 Flash Function Duration....30
6.2.3 Logic Configuration....30
6.2.3.1 Number of Inputs....31
6.2.3.2 Output Sending Condition....31
6.2.3.3 Output Data Type....31
6.2.3.4 Calculation Type....31
7 Group Objects....32
8 Manual Operation....46
8.1 Reset to Factory Settings....46
8.2 Entering Programming Mode Using the Inputs....46
9 Enabling KNX Secure....47
9.1 Enabling Secure on a Project Basis....47
9.2 Marking the Device as Secure....47
9.3 Entering FDSK (Factory Default Setup Key) Information into ETS....47
9.4 First Download Process as Secure (Download)....48
9.5 Checking the Secure Status....48
9.6 Points to Note....48

1 About the Document

1.1 Purpose of the Guide

This guide provides detailed technical information about the installation, connection, parameter settings, and operating principles of the **Enervon KNX Universal Interface** device (2/4/6/8 channel models).
This document is intended for KNX system integrators, commissioning engineers, and building automation professionals.

In this guide:

- Device features and hardware structure
- Electrical connection instructions
- Safety and installation warnings
- ETS parameter descriptions
- Communication objects and function behaviors
- Application-specific additional information

are covered.

Following the steps outlined in the guide ensures the device operates correctly and safely.

1.2 Legal Notice

Enervon Technology reserves the right to make changes to the product or the content of this document without prior notice.

All technical information contained in this document reflects the status of the device at the time of publication.
Enervon Technology cannot be held responsible for any typographical errors, omissions, or differences arising from product updates that may be present in the content.

All rights to the content, images, and layout of this document are reserved.
The reproduction, distribution, processing, or sharing of this document, in whole or in part, with third parties is prohibited without the written permission of Enervon Technology.

© 2025 Enervon Technology
All rights reserved.

2 Safety Information

2.1 General Safety Information

- The device should only be operated inside **a closed electrical panel** or a suitable enclosure. Use in the open, exposure to moisture, and external factors may cause damage to the device.
- Installation, commissioning, and maintenance procedures should **only** be performed by **authorized and qualified electricians**.
- Before working on the device, **the power to the KNX line and all connected signal cables must be disconnected**.
- **No external voltage should be applied** to dry contact and sensor inputs outside the range permitted by the device.
- The product must be used within the ambient temperature, humidity, and mechanical protection class limits specified in the technical data section.

- The device must be protected against impact, water, and dust during transport or storage.

2.2 Specialist Personnel Requirements

The installation and programming of the device via ETS requires expertise in KNX systems.

Personnel with knowledge of the following topics is mandatory:

- KNX TP1 communication principles
- SELV low-voltage safety rules
- Signal cabling techniques
- Sensor connections (dry contact, NTC temperature sensor)
- Parameter configuration with ETS

Incorrect connections or incorrect parameter settings may cause the system to malfunction or damage the device.

2.3 Proper Use of the Device

- The Enervon KNX Universal Interface is designed only for detecting **SELV class low-voltage signals** (e.g., button, magnetic contact, sensor input).
- Under no circumstances should **any voltage outside the 21V-32V range** be applied to the inputs. Doing so will cause permanent damage to the device.
- All inputs must be used with dry contacts, NPN/PNP signals, or compatible **NTC temperature sensors**.
- The device is not intended **for load driving**; motors, relays, lighting, lamps, or other power-requiring equipment cannot be connected.
- The device must only be operated when connected **to a KNX TP line**.
- The product must not be used for purposes other than those specified by the manufacturer.

2.4 SELV Safety Note

- All inputs of the device are designed in accordance with **SELV (Safety Extra-Low Voltage)** standards.
- Connecting to voltage sources other than SELV may cause **electrical hazards**, **fire risk**, and **device failure.**
- It is mandatory that the sensor and connection lines **are insulated** in accordance with the SELV structure **and** connected to a **low-voltage, safe** line.

3 Product Description

3.1 Device Description

The Enervon **KNX Universal Interface (EUI Series)** is a multi-purpose input module designed to safely and flexibly integrate various external signal sources into the KNX system.
The device can detect various signals such as buttons, switches, magnetic contacts, NPN/PNP outputs, and **NTC temperature sensors**.

EUI series devices are available in 2, 4, 6, and 8 channel options.

- Available in **2, 4, 6, and 8 channel** options.
- Each channel can be used independently in **dry contact**, **digital input (NPN/PNP),** or **temperature sensor (NTC)** mode.
- All models **are powered via the bus (KNX TP1)** and do not require external power.
- Thanks to their compact design, they are suitable for installation in wall-mounted boxes, sensor boxes, or switchboard enclosures.
- Physical addressing and parameter settings are performed **via ETS**.

The device offers a flexible solution for building automation projects, including lighting control, blinds, scenario management, logic operations, counter functions, temperature monitoring, and many more applications.

3.2 Product Models

The current model list for the EUI series is provided below:

Model Code	Product Name	Number of Channels	Description
EUI-0200	KNX Universal Interface	2 Channels	Compact input module
EUI-0400	KNX Universal Interface	4-Channel	Multi-input function
EUI-0600	KNX Universal Interface	6 Channels	Expanded input options
EUI-0800	KNX Universal Interface	8 Channels	Maximum input capacity

3.3 Functions

On/Off / Toggle	Digital control for lighting or switching applications
Dimming	Light level control with single or double buttons
Shutter/Blind	Up/down control and stop commands for blinds
Scene	Scene recall or scene save functions
Value	1-byte, 2-byte, or 4-byte value transmission
Counter / Pulse Counter	For pulse counting, energy meter outputs, or counter applications
Mode Selection	Select between different operating modes
Temperature Sensor (NTC)	Measures and reports ambient temperature
Resistor Input	Some special sensor applications requiring analog resistance measurement
RGB / RGBW	Triggering color control signals (for external drivers)
LED Output / Status LED	Low-current LED output for status indication or feedback

3.4 Technical Information

Device

Number of Channels	2, 4, 6, 8
Dimensions	40 x 11.3 x 40 mm
Protection Type	IP20
Overvoltage Category	I
Overload Protection	Yes
Short Circuit Protection	Yes
Reverse Voltage Protection	Yes
Operating Temperature	-5°C … 45°C
Storage Temperature	-25°C … 60°C
Configuration	S Mode (ETS)
Color	White
Material	ABS UL94 V0

Electrical

KNX Bus Voltage Range	21 - 32 V DC
Current Consumption	< 10 mA
Output Voltage	5 V DC
Output Current	12 mA

3.5 Dimension Drawing

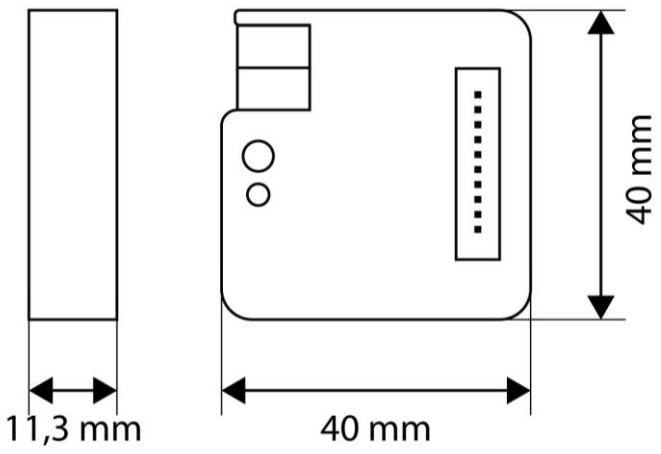

3.6 Connection Diagram

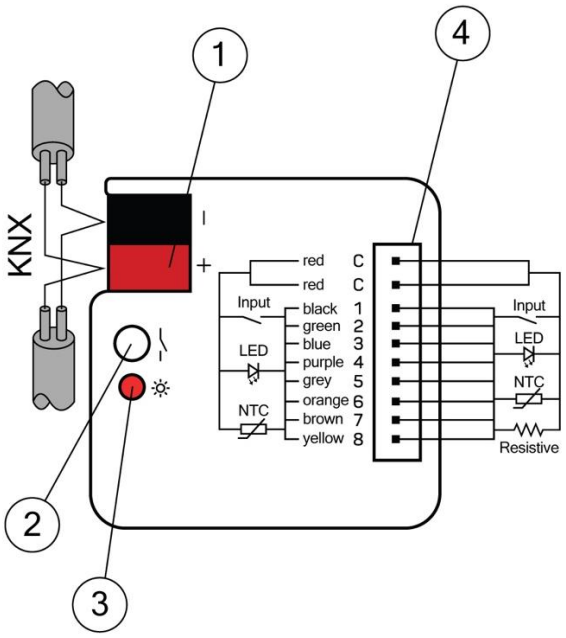

1 – KNX Line

2 – Programming Button

3 – Programming LED

4 – Dry Contact Inputs

4 Installation and Setup

4.1 Installation Information

The Enervon EUI series is a compact input module developed for use as a sensor and switch interface in KNX-based systems. The device is designed to be easily positioned in wiring boxes and behind-the-wall applications.

Key installation features:

- Can be installed in all standard **60 mm diameter** junction boxes.
- Its low-profile design makes it suitable for use **behind switch mechanisms**, **sensor boxes,** or **surface mounting inside panels**.
- The KNX line connection is made via **the KNX terminal** provided with the device.
- **The plug-and-play terminal blocks** used for inputs provide quick installation and field service convenience.

Note:
Ensure that the total current load of the KNX line is not exceeded.
Typical consumption of the EUI series: **approximately 10–12 mA**.
The KNX line capacity must be taken into account during project planning.

4.2 Wall-Mount Installation

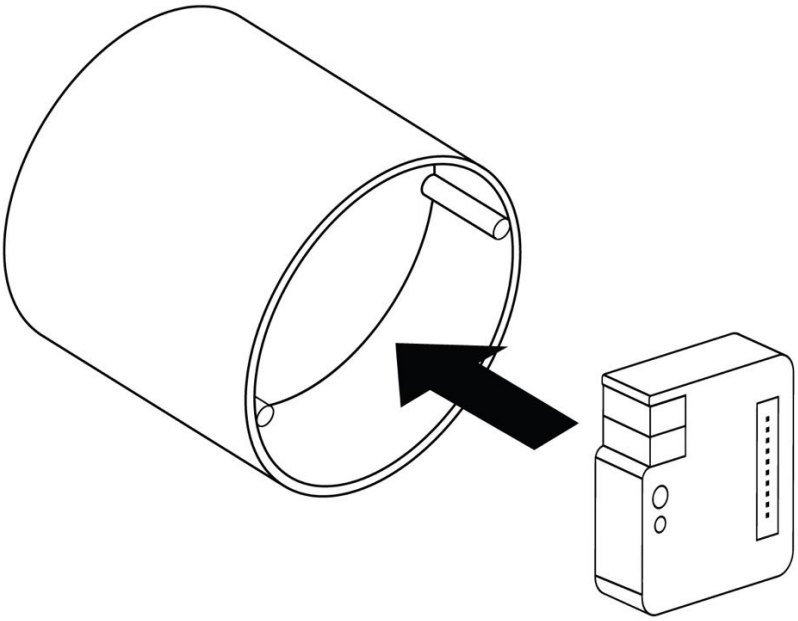

⚠ WARNING – Risk of Electrical Contact

Contact with conductors under voltage may cause injury or equipment damage.

- Disconnect the power to the relevant circuit before starting the installation process.
- Use the device only in a suitable enclosure or enclosed installation environment.

4.2.1 Installation Process

1. Place the input cables to be used into the terminal blocks.
2. Insulate any unnecessary or unused conductors to make them safe.
3. Connect the KNX connection terminal to the device.
4. Connect the sensor or switch inputs.
5. Secure the device by positioning it inside the junction box.

The device's ergonomic form is optimized to prevent interference with switch modules and sensor enclosures.

4.3 Removing from the Wall-Mounted Box

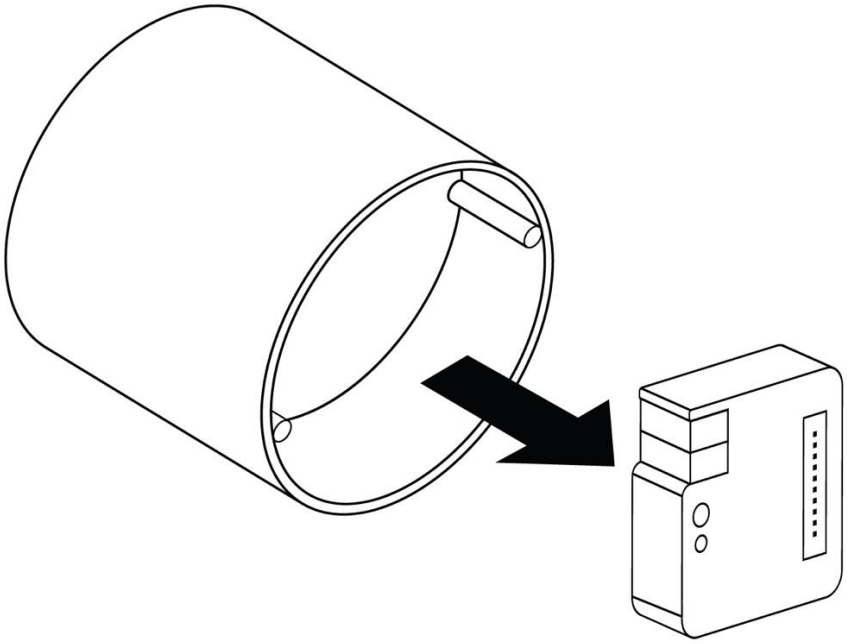

⚠ WARNING – Risk of Electric Shock

Voltages from connected phase lines may pose a hazard upon contact and cause serious injury.

- Completely disconnect the power to the relevant circuit before performing any work on the device.
- Operate the device only in a closed electrical installation environment.

4.3.1 Removal Procedure Steps

1. Open the enclosure cover or expose the device.
2. Gently pull the EUI device forward from its socket.
3. Carefully remove the KNX bus terminal and any connected input cables.
4. Safely isolate any unused or exposed cables.

The device is now completely separated from the box and ready for reassembly, replacement, or maintenance.

5 Commissioning

5.1 Commissioning Prerequisites

The following requirements must be met for the EUI series to be integrated into the KNX network:

- A computer with ETS software installed
- An interface providing access to the KNX TP line (IP, USB, or similar KNX connection device)
- The EUI series device application must be installed in ETS
- Minimum ETS version: **ETS 5 or higher**
- Power supply must be active on the KNX bus

Commissioning is performed only via ETS. There is no user-accessible configuration menu or physical settings on the device.

5.2 Secure Commissioning with KNX Data Secure

The EUI series supports the KNX DATA Secure standard. This feature ensures that all communication between the device and the KNX network is encrypted and protected against unauthorized access.

Equipment and information to be considered during secure commissioning:

5.2.1 Project Password

- A **project password** must be created for all projects using DATA Secure.
- This password protects all Secure operations performed within ETS and prevents the system from falling into KNX Plain mode.
- If the project password is lost, the project cannot be reopened; the password cannot be recovered.

5.2.2 FDSK – Factory Default Setup Key

Each EUI device comes with a factory default setup key (FDSK) required for secure commissioning.

- The FDSK is located on the device as **a removable label** and **QR code**.
- When the device is programmed for the first time, ETS will ask you to enter the FDSK information or scan the QR code.
- Like other Secure devices in the same project, all FDSK values can be pre-stored in the security section within ETS.
- The FDSK is only required during the initial commissioning process unless the device is reset to factory settings.

ETS 6 is recommended for proper DATA Secure operations, but the minimum requirement is ETS 5.

5.3 Initial Startup and Default Settings

When the device receives KNX power for the first time, it automatically operates with factory settings:

- Default physical address: **15.15.99**
- Device application: **pre-installed**
- All inputs are disabled and await configuration via ETS

The EUI device becomes detectable by ETS as soon as it is connected to the KNX bus.

5.4 Operating the Device

1. Connect the device to the KNX TP bus.
2. Activate the KNX power supply.
3. The programming LED flashes briefly and the device is ready for operation.
4. The EUI device can now be addressed and configured via ETS.

After this stage, physical address assignment and application installation can be performed.

5.5 Physical Address Assignment

Each device in the EUI series must be assigned a unique physical address to be defined in the KNX network.

5.5.1 Step-by-step assignment process:

1. Press **the Programming (Prog.) button** on the device.
    - The Programming LED will light up, indicating that the device is in programming mode.
2. Initiate the "Program Physical Address" command via ETS.
3. After the address is assigned, the device performs a brief reboot.
4. The device is now ready for programming within ETS with its new address.

During address assignment, the device resets its internal states to ensure a safe startup.

5.6 Application Download

• After the physical address is assigned, the device application can be downloaded via ETS.

• If an application update or parameter changes are required, it can be reloaded via ETS.

• The initial installation of the device application may take slightly longer than subsequent downloads.

6 Features

6.1 Device Features

The device has up to 8 input options. Each input supports the following features.

- **On/Off/Toggle:** Sends a value of 0 or 1 using a 1-bit object.
- **Dimming:** Provides brightness adjustment using the Dimming and On/Off objects.
- **Shutter/Blind:** Configures the input for shutter and blind control.
- **Scene:** Controls up to 64 scene features.
- **Value:** Sends 1-byte or 1-bit values.
- **Counter:** Counts pulses received from the input.
- **Mode Selection:** Allows switching between modes used in temperature control.
- **Command Sequence:** Sends data to the KNX bus in sequence according to the selected number of steps.
- **Temperature:** Sends the temperature value from the connected NTC sensor to the KNX bus.
- **Resistor:** Sends the value of a connected resistive sensor to the KNX bus.
- **RGB:** Provides RGB light control.
- **RGBW:** Provides RGBW light control.
- **LED Output:** Provides LED control.

6.2 ETS Parameters

The Enervon Universal Interface device is a fully KNX-compatible device that must be configured using the KNX configuration tool ETS (minimum version 5). The database for this device can be downloaded from the ETS online catalog.

6.2.1 General Settings

The General Settings page appears as follows.

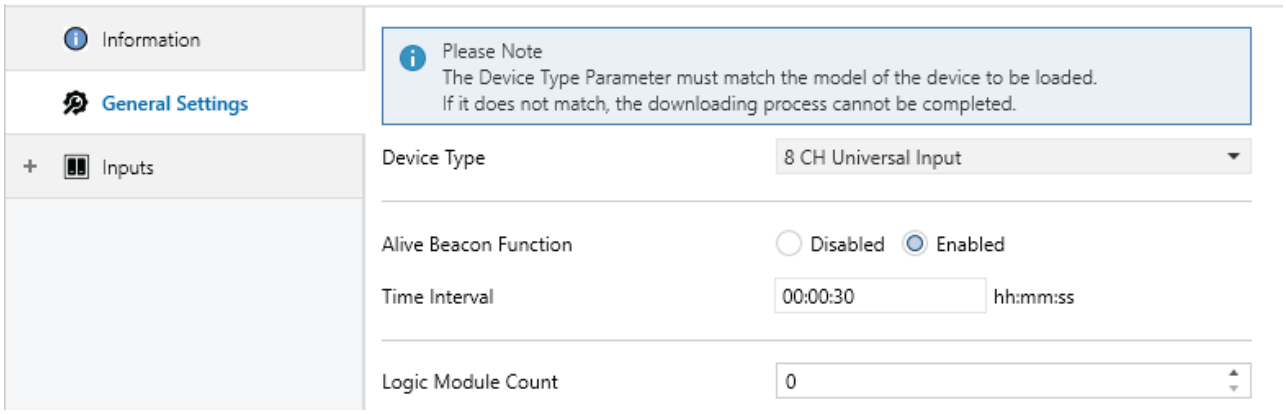

Figure1 : General Settings Page

6.2.1.1 Device Type

Determines the number of inputs for the device. Only the Universal Interface device corresponding to the selected value here can be loaded.

For example, if "8 CH Universal Input" is selected, changes made can only be loaded onto an 8-channel Universal Interface device. Possible values:

- 2 CH Universal Input
- 4 CH Universal Input
- 6 CH Universal Input
- 8 CH Universal Input

6.2.1.2 Alive Beacon Function

Sends the device status to the KNX bus at the interval set by the "Time Interval" parameter.

6.2.1.2.1 Time Interval

Determines how frequently the "Device Liveness Check" parameter is sent to the KNX bus.

For this parameter to be visible, the "Device Liveness Check" parameter must be set to "Enabled".

6.2.1.3 Number of Logic Modules

The number of logic modules to be used in the device is determined here. A maximum of 10 logic modules can be used.

6.2.2 Input Configuration

The purpose for which the inputs will be used and the configuration of the relevant selection are set on this page. The page appears as follows.

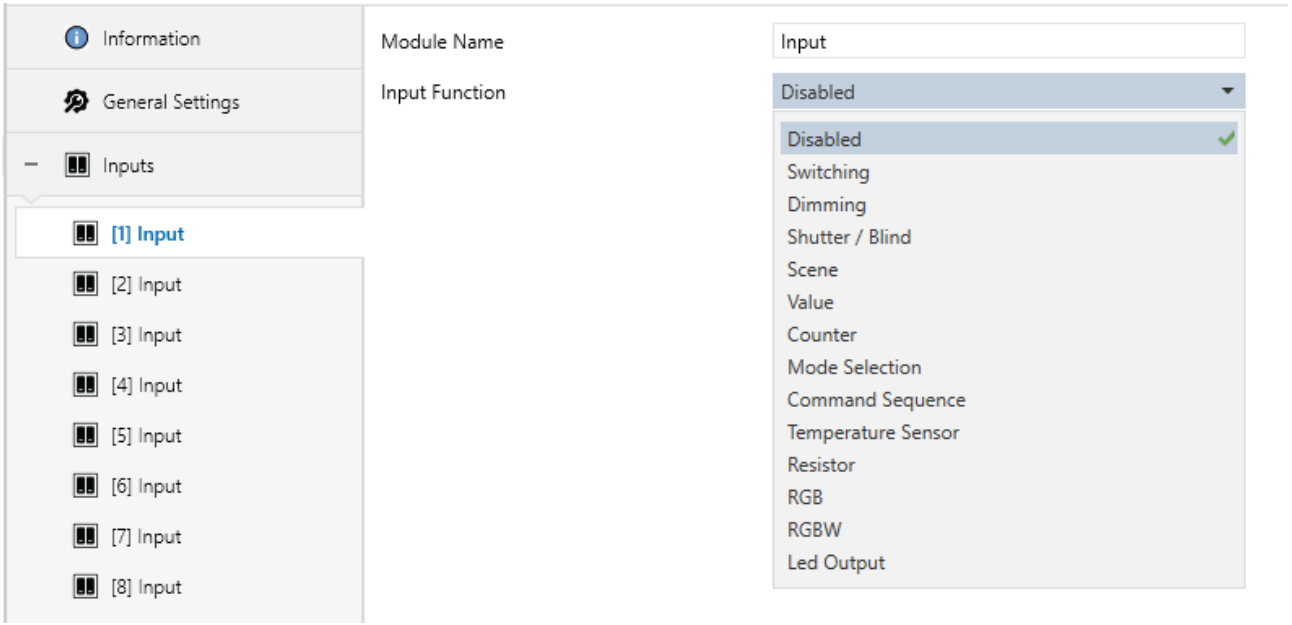

Figure 2: Input Configuration Page

6.2.2.1 Module Name

The name of the module is specified here. The name given changes both the menu name and the name of the communication objects used by the module. See Figure 3 – Figure 4.



Figure 3: Object Naming

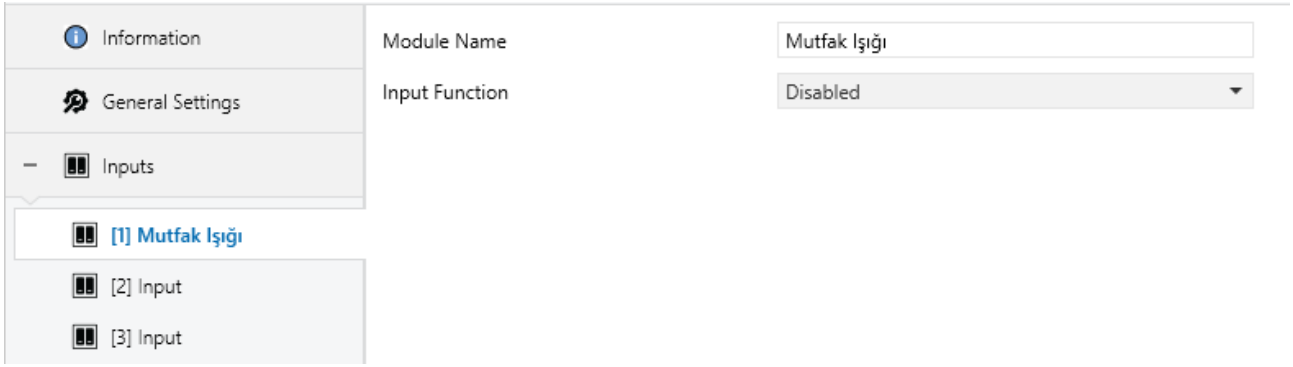

Figure 4: Module Naming

6.2.2.2 Input Function

The function of the relevant input is selected from this parameter. If "Disabled" is selected, the input is inactive. Possible values:

- Switching
- Dimming
- Shutter/Blind
- Scene
- Value
- Counter
- Mode Selection
- Command Sequence
- Temperature
- Resistor
- RGB
- RGBW
- LED Output

6.2.2.3 Lock Object

When selected, it opens an object to set the module to "Active" or "Passive".

6.2.2.3.1 Switching

Sends "On" or "Off" information to the KNX bus using a 1-bit object. It appears as follows.

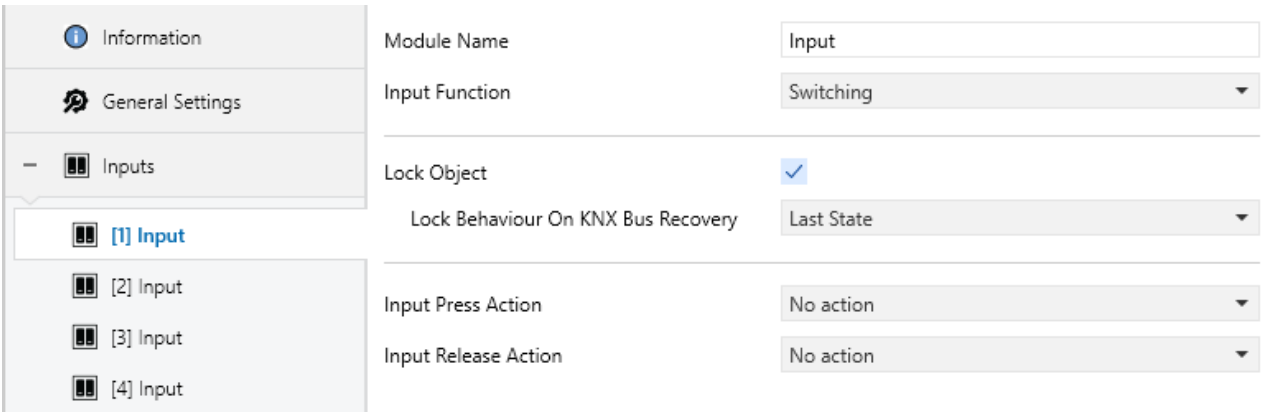

Figure 5: Switching Configuration

6.2.2.3.1.1 Input Press Action

Specifies the action to be performed when the input is short-circuited. It can take the following values.

- On: Sends an "On" signal to the KNX bus.

- Off: Sends an "Off" signal to the KNX bus.

- Toggle: Sends either "On" or "Off" information to the KNX bus depending on the last state of the relevant object.

6.2.2.3.1.2 Input Release Action

Specifies the action to be taken when the input is open circuit. It can take the following values.

- On: Sends an "On" signal to the KNX bus.

- Off: Sends an "Off" signal to the KNX bus.

- Toggle: Sends either "On" or "Off" information to the KNX bus based on the current state of the relevant object.

6.2.2.3.2 Dimming

Enables the dimming option. It appears as follows.

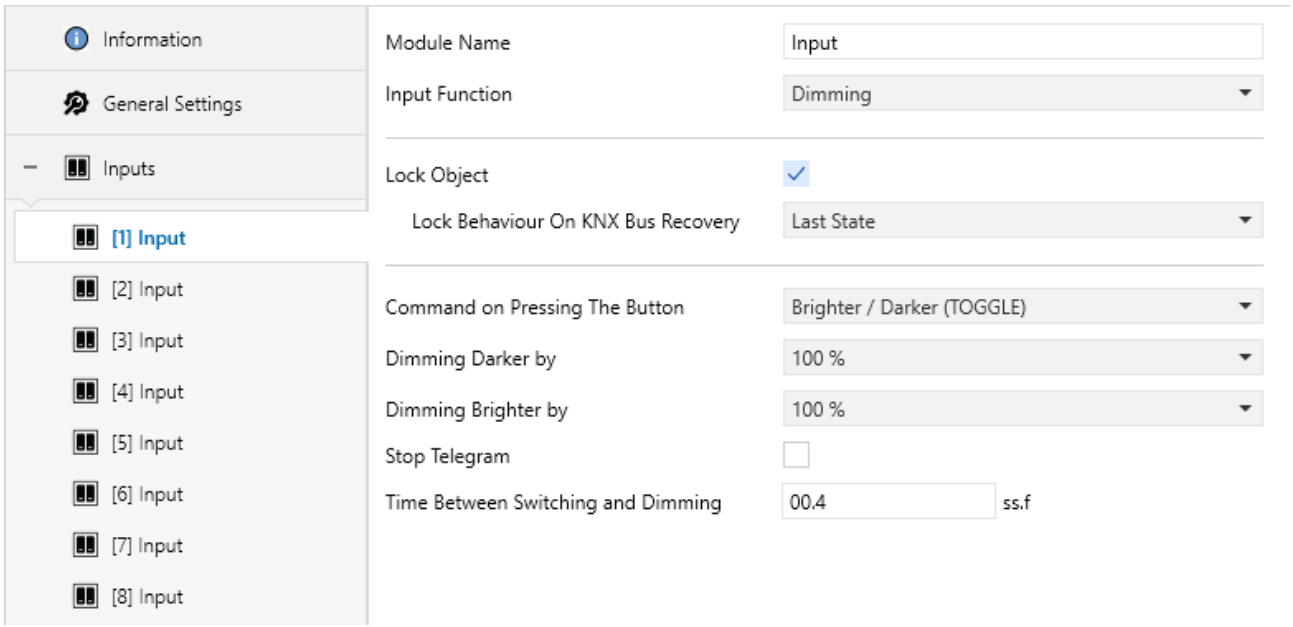

6.2.2.3.2.1 Command on Pressing The Button

Specifies the action to be taken when an input short circuit occurs. It can take the following values.

- Darker (Off): Performs the Off or Dimming action when a short circuit occurs at the input.

- Brighter (On): Performs the On or Dimming action when a short circuit occurs at the input.

- Brighter/Darker (Toggle): Performs either On or Off based on the input's last state.

6.2.2.3.2.2 Dimming Darker By

Sets the dimming value during Darker.

6.2.2.3.2.3 Brighter Dimming Value

Sets the dimming value for Brighter.

6.2.2.3.2.4 Telegram Stop

Specifies whether the telegram should be stopped when the input is open circuit while dimming is being sent.

6.2.2.3.2.5 Time Between Switching and Dimming

Specifies how long the input must remain short-circuited to perform dimming.

6.2.2.3.3 Shutter/Blind

Enables the Shutter/Blind option. It appears as follows.

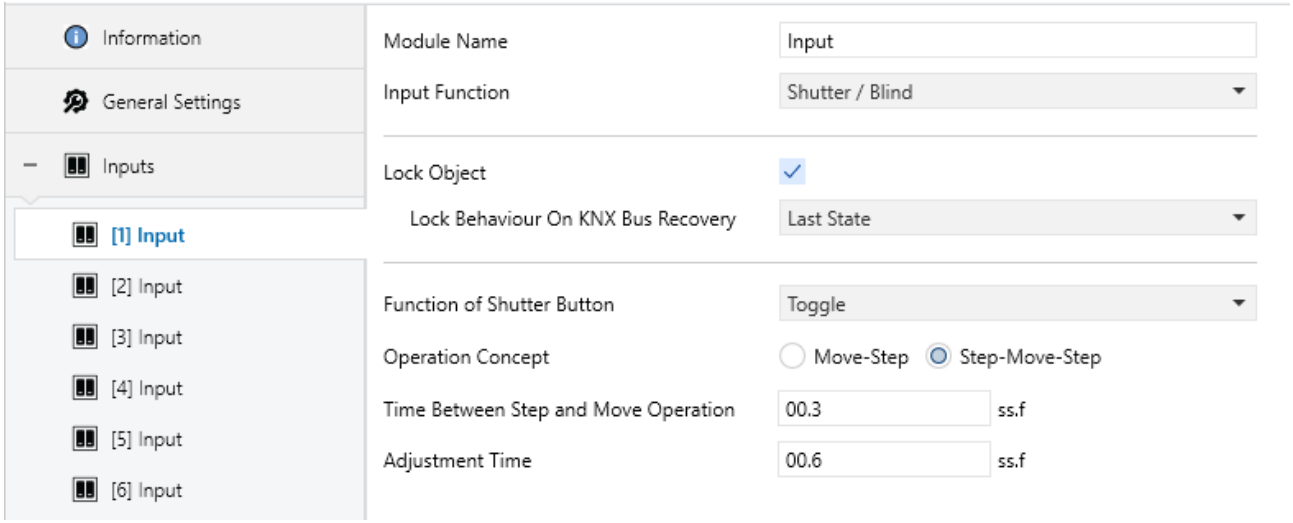

6.2.2.3.3.1 Function of Shutter Button

Specifies how the Shutter will behave when the input is short-circuited. It can take the following values.

- Down: When the input is short-circuited, downward movement is provided.

- Up: When a short circuit occurs at the input, movement is provided in the upward direction.

- Toggle: Movement is provided in the down or up direction based on the last operation performed.

6.2.2.3.3.2 Operation Concept

Specifies how the shutter will move. It can take the following values.

- Move-Step

- Step-Move-Step

6.2.2.3.4 Scene

Enables the Scene option. It appears as follows.

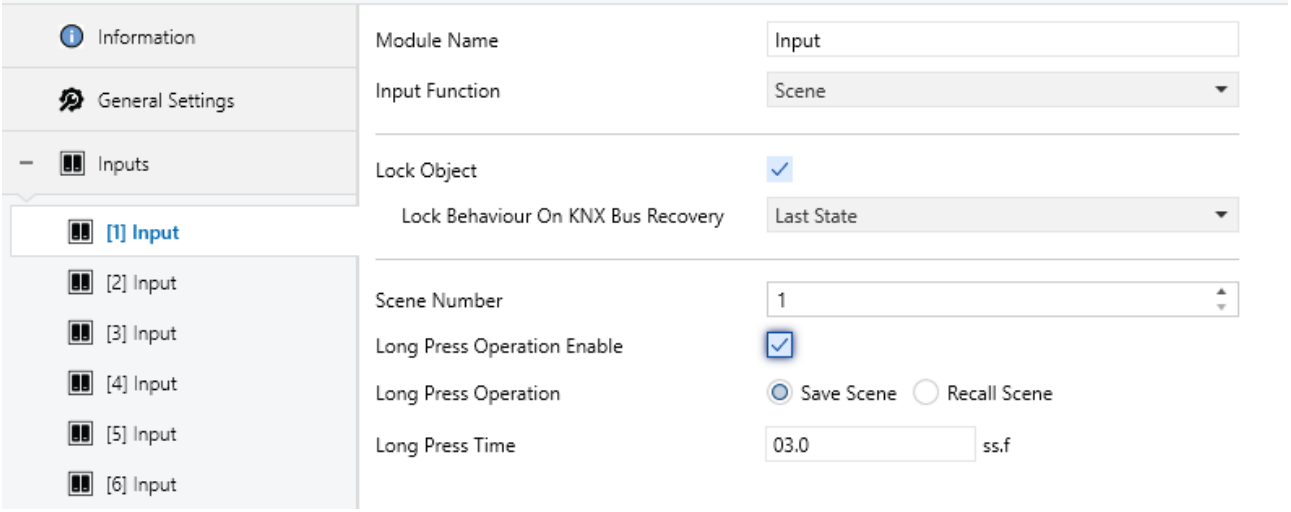

Figure 8: Scene Configuration

6.2.2.3.4.1 Scene Number

Specifies the scene number to be sent to the KNX bus when a short circuit occurs at the input.

6.2.2.3.4.2 Long Press Operation Enable

Specifies whether the long press operation is active or inactive.

6.2.2.3.4.3 Long Press Operation

Specifies the action to be performed during a long press. It can take the following values.

- Save Scene

- Recall Scene

6.2.2.3.4.4 Long Press Time

Specifies the long press detection duration.

6.2.2.3.5 Value

Sends a 1-byte or 1-bit value to the KNX bus. It appears as follows.

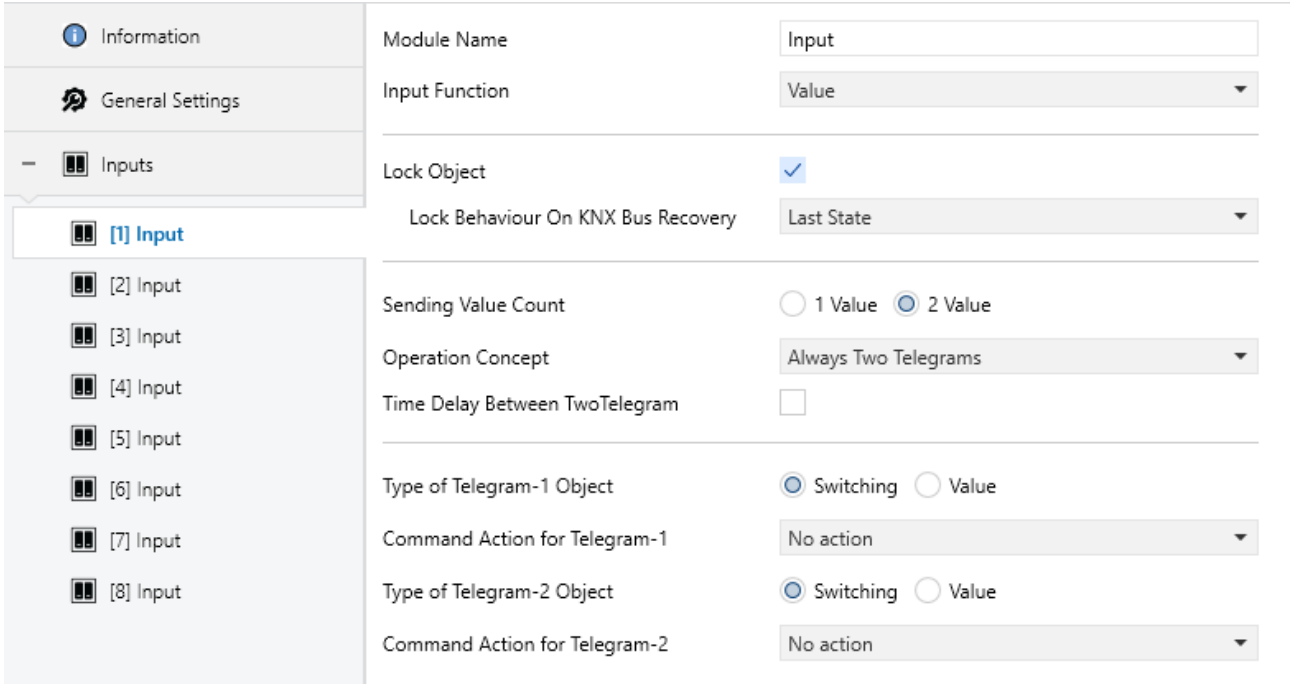

6.2.2.3.5.1 Sending Value Count

Specifies how many Values will be sent when the input is short-circuited.

- 1 Value

- 2 Values

6.2.2.3.5.2 Operation Concept

When sending 2 Values, it determines under which conditions the values will be sent. It can take the following values.

- Always 2 telegrams

- Short press / Long press

- Press / Release

6.2.2.3.5.3 1. Object Type

Specifies the type of the first value to be sent.

6.2.2.3.5.4 1. Object Value

Specifies the value of the 1st value to be sent.

6.2.2.3.5.5 2. Object Type

Specifies the type of the second value to be sent.

6.2.2.3.5.6 2. Object Value

Specifies the value of the second value to be sent.

6.2.2.3.6 Counter

Enables the counter feature. It appears as follows.

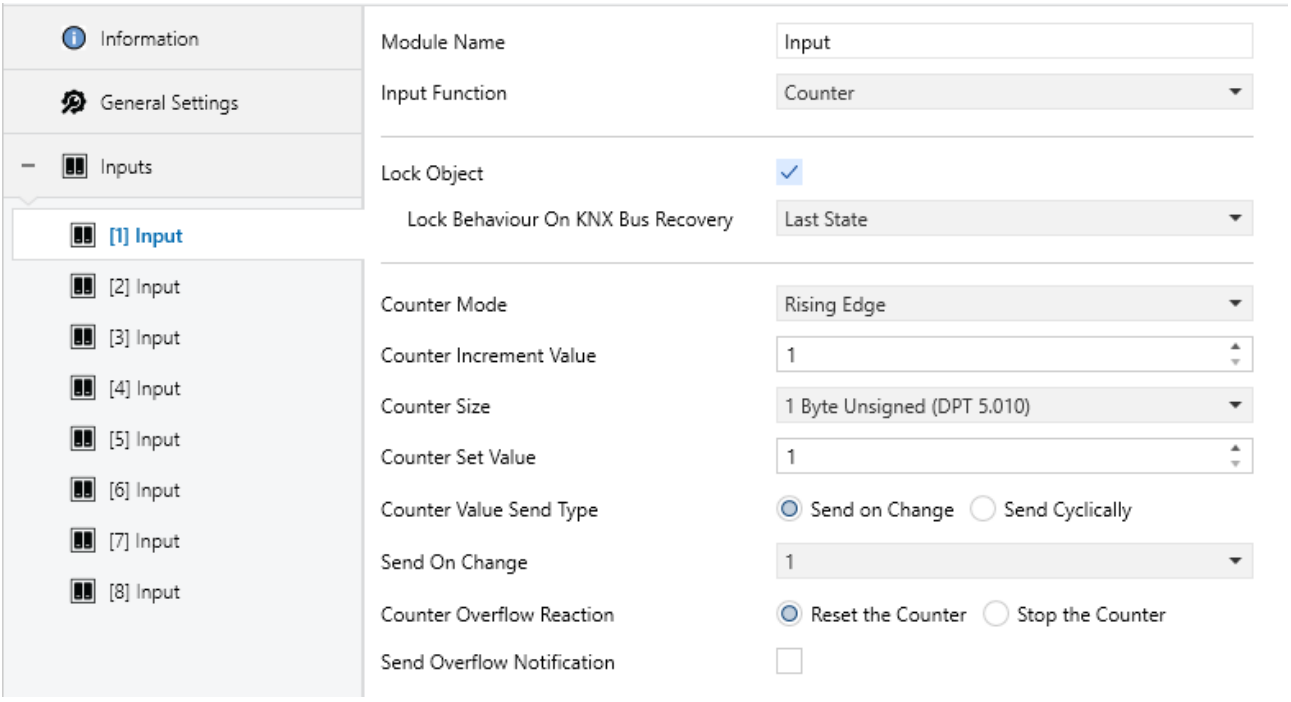

Figure 10: Counter Configuration

6.2.2.3.6.1 Counter Mode

Specifies which state the counter will count. It can take the following values.

- Rising Edge

- Falling Edge

- Rising and Falling Edge

6.2.2.3.6.2 Counter Increment Value

Specifies how much the counter will increment each time.

6.2.2.3.6.3 Counter Size

Specifies the size of the counter. It can take the following values.

- 1 Byte Unsigned

- 2-byte unsigned

- 4-byte unsigned

6.2.2.3.6.4 Counter Set Value

Specifies the maximum value the counter can count. The size of the set value varies depending on the "Counter Size" parameter.

6.2.2.3.6.5 Counter Value Send Type

Specifies under which conditions the counter sends values to the KNX bus. It can take the following values.

- Send on Change

- Send Periodically

6.2.2.3.6.6 Counter Overflow Reaction

Specifies how the counter will behave when it reaches the "Set Value". It can take the following values.

- Reset Counter

- Stop the Counter

6.2.2.3.6.7 Send Overflow Notification

Specifies whether information is sent to the KNX bus when the counter reaches the "Set Value".

6.2.2.3.7 Mode Selection

Controls the modes used in temperature control. It appears as follows.

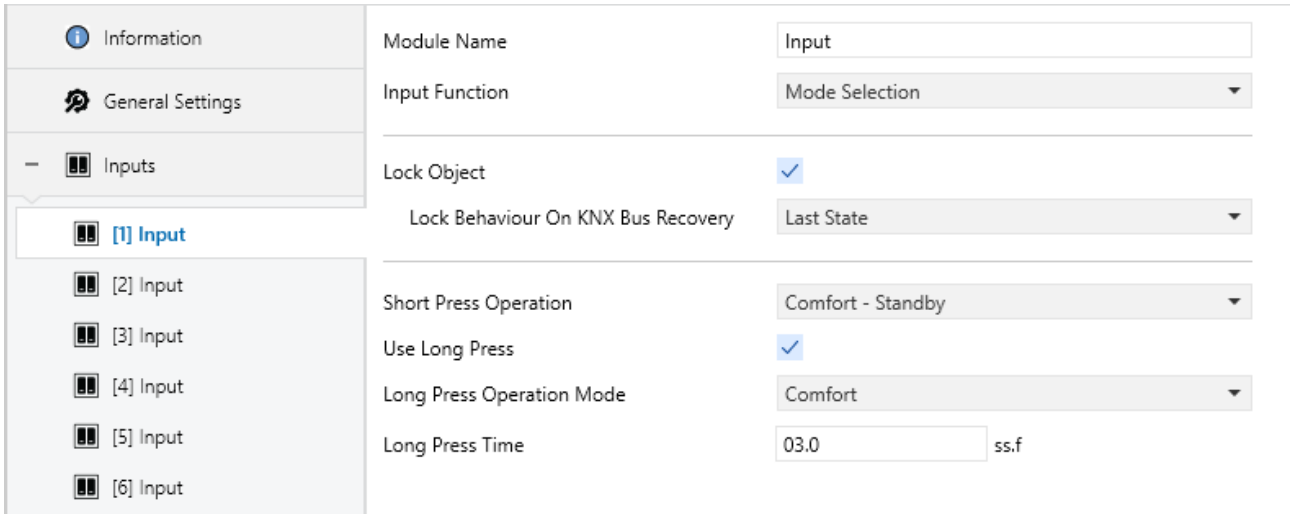

6.2.2.3.7.1 Short Press Operation

Specifies the action to be taken when the input is short-circuited. Switches between the selected values. Can take the following values.

- Comfort – Standby

- Comfort – Economy

- Comfort – Building Protection

6.2.2.3.7.2 Use Long Press

The input indicates the activation of long-term short circuit usage.

6.2.2.3.7.3 Long Press Operation Mode

Indicates the action to be taken when a long press occurs. The selected value is sent to the KNX bus. It can take the following values.

- Comfort

- Standby

- Economy

- Building Protection

6.2.2.3.7.4 Long Press Time

Indicates the long press duration.

6.2.2.3.8 Command Sequence

Sends data to the KNX bus in sequence according to the selected number of steps. It appears as follows.

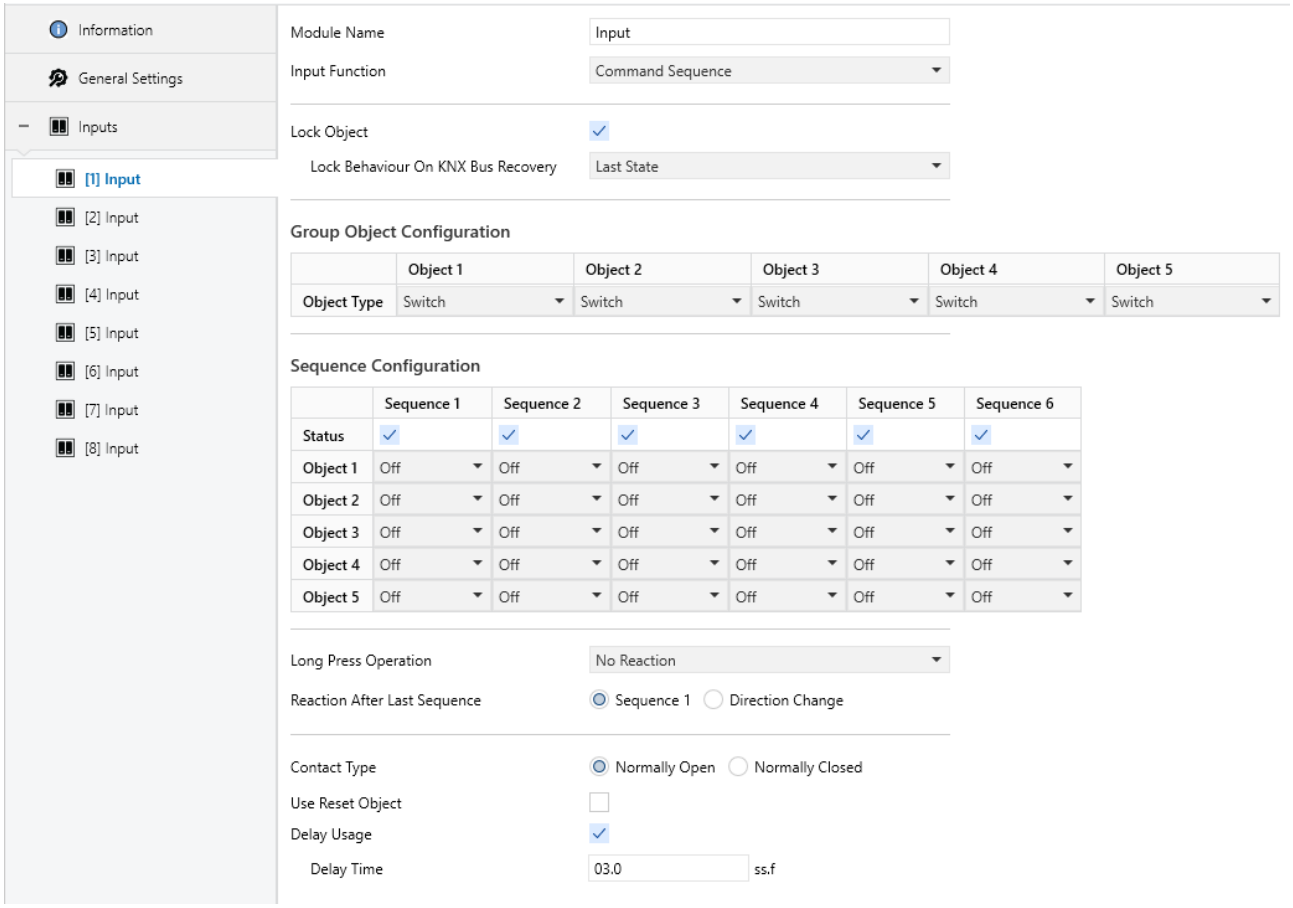

Figure 12: Command Sequence Configuration

6.2.2.3.8.1 Object X Type

Defines the data point type of the objects to be sent to the KNX bus.

6.2.2.3.8.2 Sequence X Status

Determines which steps will be sent to the KNX bus.

NOTE: For a step to be active, the previous step must be active.

6.2.2.3.8.3 Sequence X Object X Value

Defines the value to be sent to the relevant object in the relevant step.

6.2.2.3.8.4 Long Press Operation

Specifies the action to be performed during a long press operation.

6.2.2.3.8.5 Long Press Time

Defines the duration required for the long press operation to be active.

6.2.2.3.8.6 Reaction After Last Sequence

Defines the behavior the system will exhibit after the last step.

6.2.2.3.8.7 Contact Type

Defines the contact type of the input.

6.2.2.3.8.8 Use Reset Object

Determines whether an object should be used when its step status is reset.

6.2.2.3.8.9 Delay Usage

Determines whether the object values in the step will be sent with a delay.

6.2.2.3.8.10 Delay Time

Defines the delay time.

6.2.2.3.9 Temperature Sensor

Measures the temperature value of the "NTC" sensor connected to the input and sends the information to the KNX bus. It appears as follows.

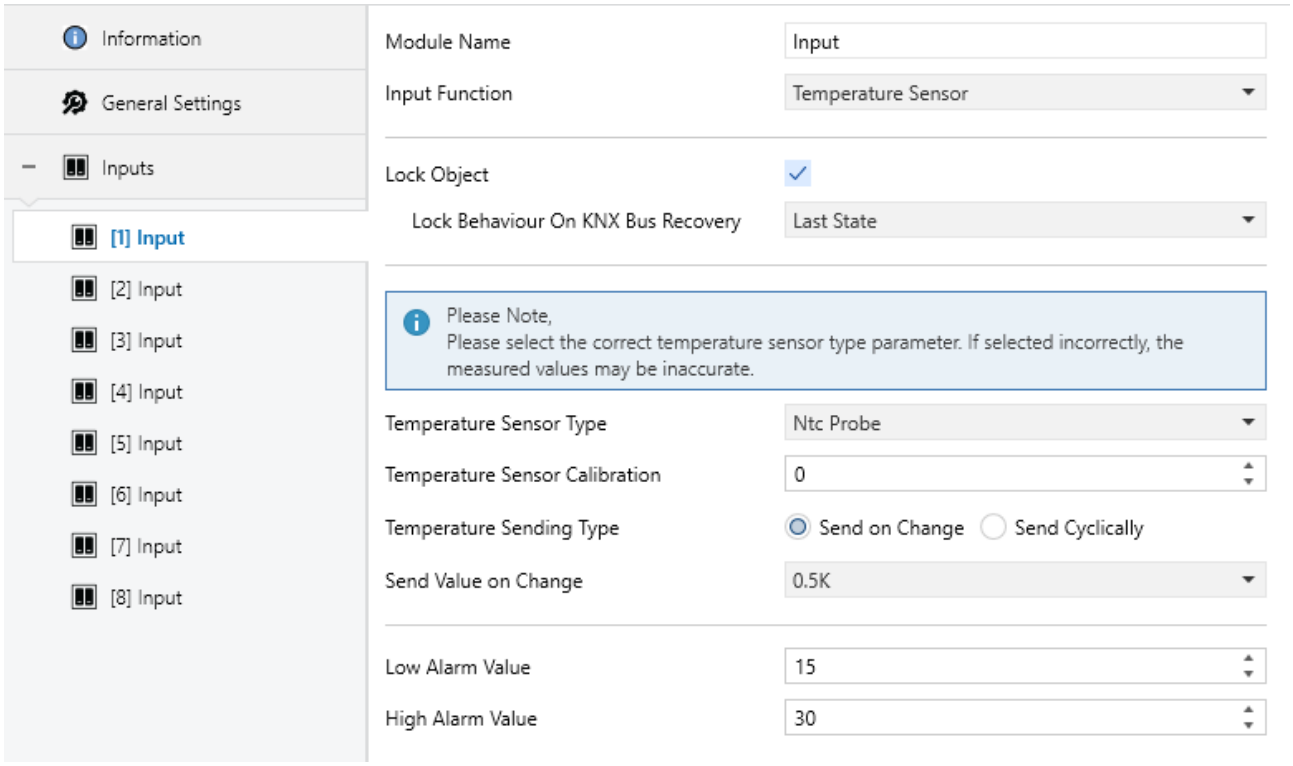

Figure 13: Temperature Sensor Configuration

6.2.2.3.9.1 Temperature Sensor Calibration

Specifies the calibrated value of the measured temperature.

For example, if the room temperature is 25 degrees and the measured temperature is 25.7 degrees, this parameter can be calibrated by entering a temperature value of -0.7.

6.2.2.3.9.2 Temperature Sending Type

Specifies under which conditions the temperature value will be sent to the KNX bus. It can take the following values.

- Send When Changed

- Send Periodically

6.2.2.3.9.3 Low Alarm Value

When the measured temperature value falls below this value, a 1-bit alarm value is sent to the KNX bus.

6.2.2.3.9.4 High Alarm Value

When the measured temperature value exceeds this value, it sends a 1-bit alarm value to the KNX bus.

6.2.2.3.10 Resistor

Measures the value of the "Resistive" sensor connected to the input and sends information to the KNX bus. It appears as follows.

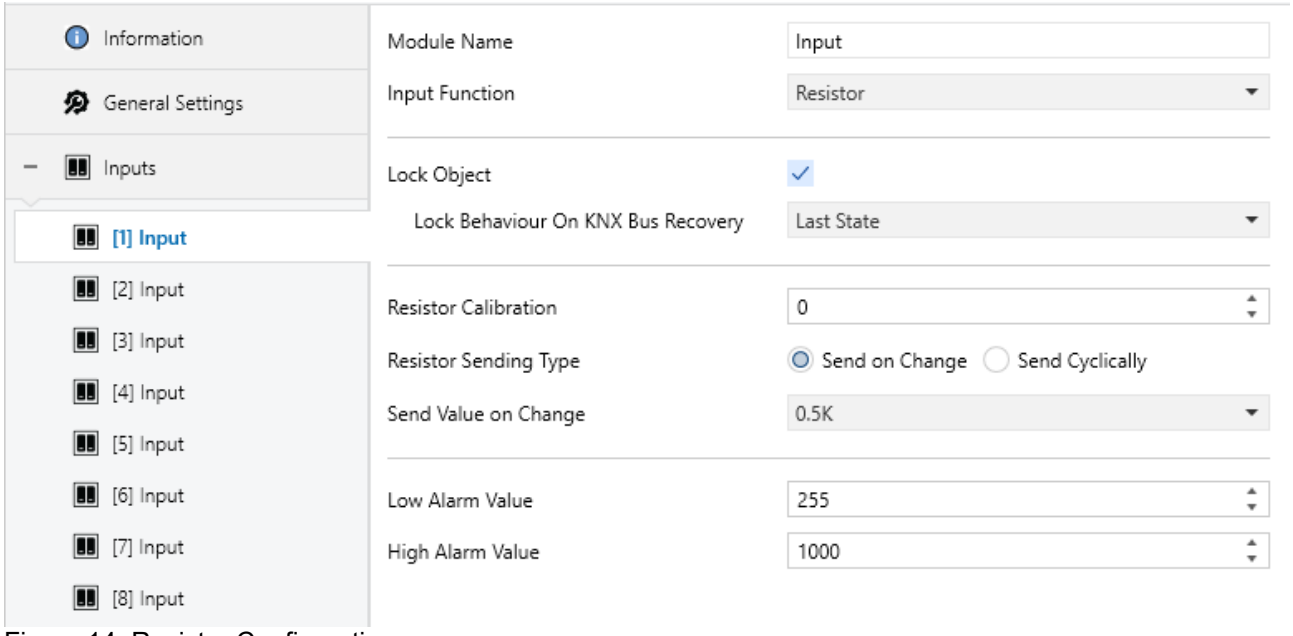

Figure 14: Resistor Configuration

6.2.2.3.10.1 Resistor Calibration

Indicates the calibrated value of the measured resistive value.

6.2.2.3.10.2 Resistor Sending Type

Specifies under which conditions the resistive value will be sent to the KNX bus. It can take the following values.

- Send When Changed

- Send Periodically

6.2.2.3.10.3 Low Alarm Value

When the measured resistive sensor value falls below this value, a 1-bit alarm value is sent to the KNX bus.

6.2.2.3.10.4 High Alarm Value

When the measured resistive sensor value exceeds this value, it sends a 1-bit alarm value to the KNX bus.

6.2.2.3.11 RGB

Enables the RGB value transmission feature. It appears as follows.

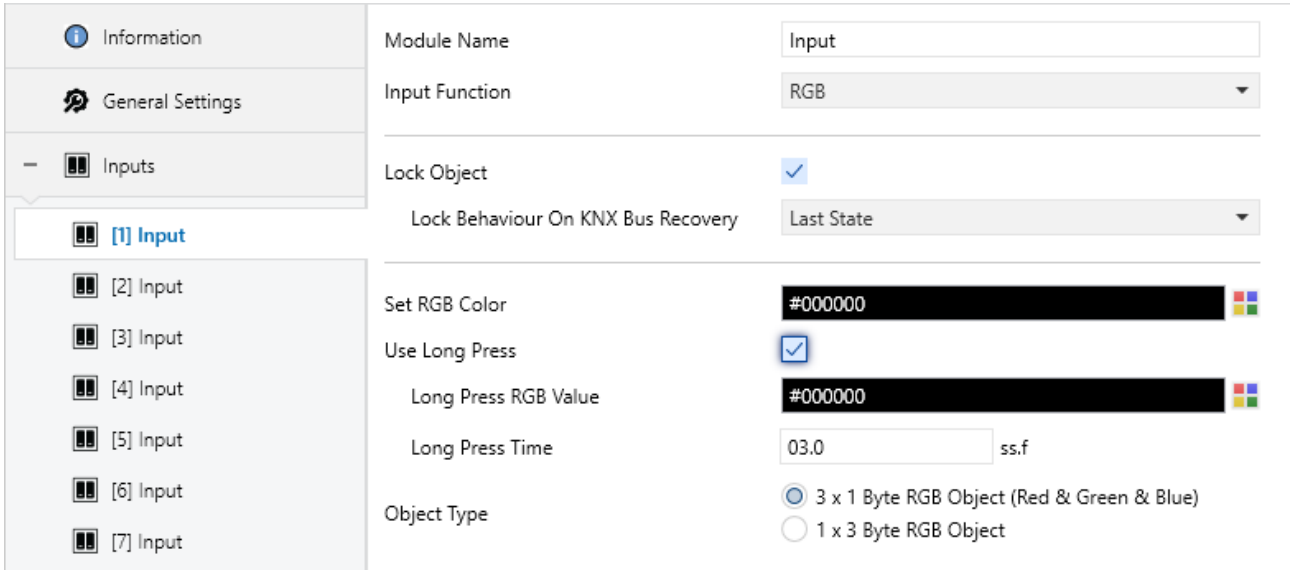

Figure 15: RGB Configuration

6.2.2.3.11.1 RGB Value

Specifies the RGB value to be sent to the KNX bus when the input is short-circuited.

6.2.2.3.11.2 Use Long Press

Determines whether the long press operation will be used.

6.2.2.3.11.3 Long Press RGB Value

Specifies the RGB value to be sent to the KNX bus during a long press.

6.2.2.3.11.4 Long Press Time

Defines the press duration required for the long press to be active.

6.2.2.3.11.5 Object Type

Specifies the object type of the RGB value to be sent to the KNX bus. It can take the following values.

- 3 x 1 Byte RGB Object: Sends each color (Red, Green, and Blue) as a 1-byte object to the KNX bus.

- 1 x 3-Byte RGB Object: Sends the RGB value to the KNX bus using a single 3-byte object.

6.2.2.3.12 RGBW

Enables the RGBW value sending feature. It appears as follows.

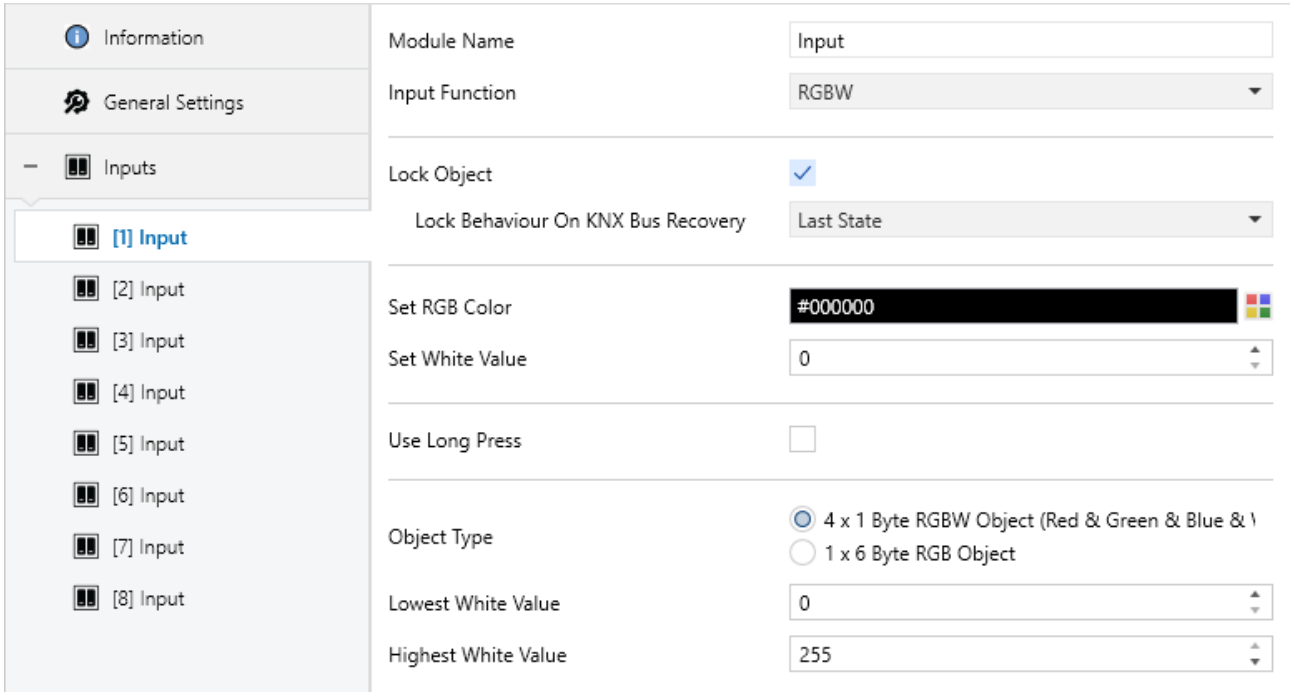

Figure 16: RGBW Configuration

6.2.2.3.12.1 RGBW Value

Specifies the RGB portion of the RGBW value to be sent to the KNX bus when the input is short-circuited.

6.2.2.3.12.2 Object Type

Specifies the object type of the RGBW value to be sent to the KNX bus. It can take the following values.

- 4 x 1 Byte RGBW Object: Sends each color (Red, Green, Blue, and White) as a 1-byte object to the KNX bus.

- 1 x 6 Byte RGBW Object: Sends the RGBW value to the KNX bus using a single 6-byte object.

6.2.2.3.12.3 White Value

Specifies the White portion of the RGBW value to be sent to the KNX bus when the input is short-circuited.

6.2.2.3.12.4 Long Press Usage

Determines whether the long press function is enabled or disabled.

6.2.2.3.12.5 Long Press RGBW Value

Specifies the RGBW value to be sent to the KNX bus during a long press.

6.2.2.3.12.6 Long Press White Value

Specifies the White value to be sent to the KNX bus during a long press.

6.2.2.3.12.7 Long Press Time

Defines the press duration required for the long press to be active.

6.2.2.3.12.8 Lowest White Value

Specifies the lowest value that White can take.

6.2.2.3.12.9 Highest White Value

Indicates the highest value that White can achieve.

6.2.2.3.13 LED Output

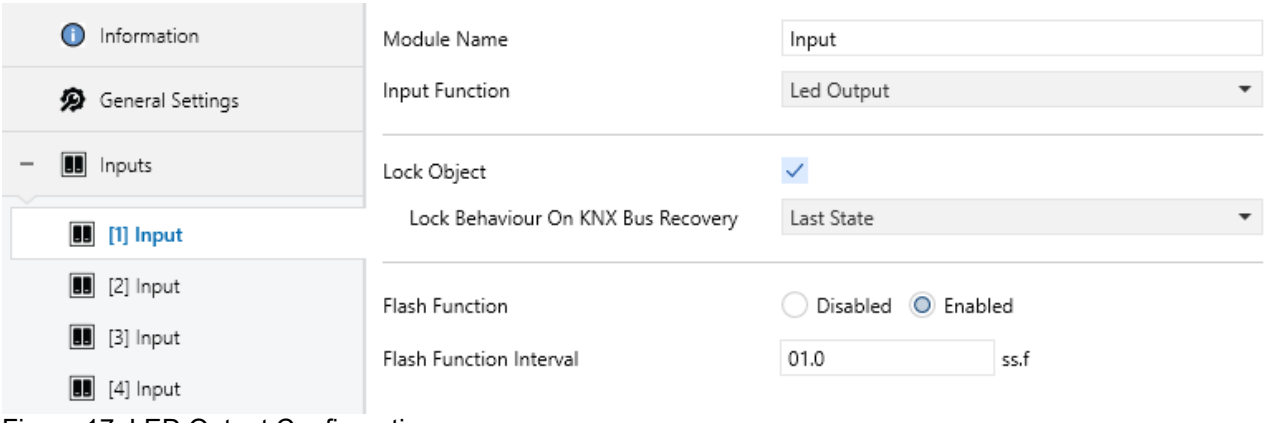

Figure 17: LED Output Configuration

6.2.2.3.13.1 Flash Function

Determines whether the flash feature is active on the LED output.

6.2.2.3.13.2 Flash Function Duration

Determines the on/off duration of the flash feature.

6.2.3 Logic Configuration

The "Logic" module in the KNX device allows complex logic operations to be performed on up to four KNX input objects. The result of these operations is sent to the KNX bus via a single output object. The logic module enables more complex automation scenarios.

To use it, the Logic Module Count must be set to a value other than 0 on the General Settings page.

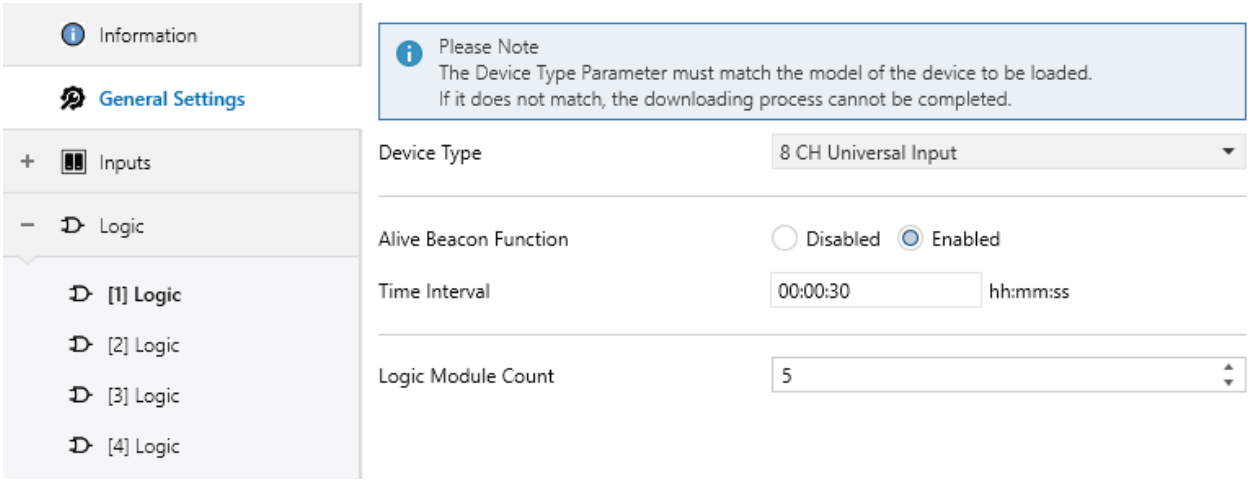

Figure 18: Setting the Number of Logic Modules

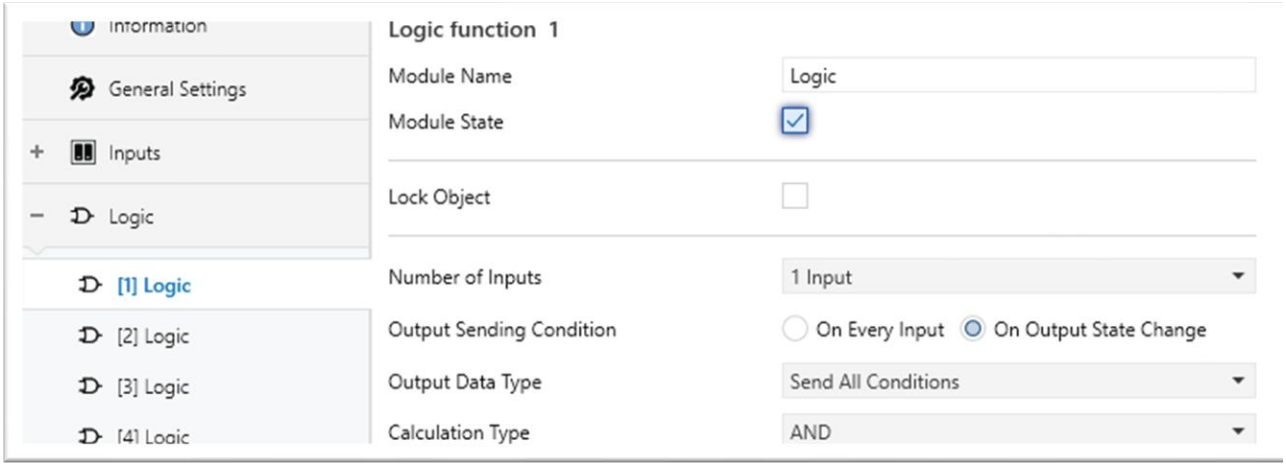

Figure 19: Logic Configuration Page

6.2.3.1 Number of Inputs

Allows you to select the number of active inputs for the module. Options: 1 input, 2 inputs, 3 inputs, and 4 inputs.

6.2.3.2 Output Sending Condition

Defines under which conditions output data will be sent. Options:

- On Output Status Change: Output data is sent only when a new value is calculated based on the inputs.
- On Every Input: Output data is sent whenever any input data is received.

6.2.3.3 Output Data Type

Specifies which output data will be sent. Options:

- Send in All Cases: Data is sent regardless of the value.
- Send Only When 1: Data is sent only if the value is 1.
- Send Only When 0: Data is sent only if the value is 0.

6.2.3.4 Calculation Type

Defines the type of logical operation to be performed on the inputs. Options: **AND, OR, XOR, NAND, NOR, and NXOR.**

7 Group Objects

Object Number	Function	Name	Length	DPT	Flags
1	[1]Input	Gate	1 Bit	DPT 1.3	RWCT-
2	[1]Input	Switching	1 Bit	DPT 1.1	RWCT-
4	[1]Input	Switching Status	1 Bit	DPT 1.1	RWCT-
2	[1]Input	Switching	1 Bit	DPT 1.1	RWCT-
3	[1]Input	Dimming	4 Bits	DPT 3.7	R-CT-
4	[1]Input	Switching Status	1 Bit	DPT 1.1	RWCT-
2	[1]Input	Up/Down	1 Bit	DPT 1.8	R-CT-
3	[1]Input	Slat Angle/Stop	1 Bit	DPT 1.8	R-CT-
2	[1]Input	Scene Control	1 Byte	DPT 18.1	--CT-
2	[1]Input	Pulse Counter - 1 Byte	1 Byte	DPT 5.10	R-CT-
2	[1]Input	Pulse Counter - 2 Bytes	2 Bytes	DPT 7.1	R-CT-
2	[1]Input	Pulse Counter - 4 Bytes	4 Bytes	DPT 12.1	R-CT-
3	[1]Input	Reset the Counter	1 Bit	DPT 1.15	-WC--
4	[1]Input	Counter Overflow	1 Bit	DPT 1.5	--CT-
2	[1]Input	Current Mode	1 Byte	DPT 12.1	R-CT-
3	[1]Input	Mode Status	1 Byte	DPT 1.15	-WCT-
2	[1]Input	Send Switch Value	1 Bit	DPT 1.1	R-CT-
2	[1]Input	Send Integer Value	1 Byte	DPT 5.10	R-CT-
2	[1]Input	Send Switch Value - On Press	1 Bit	DPT 1.1	R-CT-
2	[1]Input	Send Integer Value - On Press	1 Byte	DPT 5.10	R-CT-
2	[1]Input	Send Switch Value - Short Press	1 Bit	DPT 1.1	R-CT-
2	[1]Input	Send Integer Value - Short Press	1 Byte	DPT 5.10	R-CT-
2	[1]Input	Send Switch Value - Telegram1	1 Bit	DPT 1.1	R-CT-
2	[1]Input	Send Integer Value - Telegram1	1 Byte	DPT 5.10	R-CT-
3	[1]Input	Send Switch Value - On Release	1 Bit	DPT 1.1	R-CT-
3	[1]Input	Send Integer Value - On Release	1 Byte	DPT 5.10	R-CT-
3	[1]Input	Send Switch Value - Long Press	1 Bit	DPT 1.1	R-CT-
3	[1]Input	Send Integer Value - Long Press	1 Byte	DPT 5.10	R-CT-
3	[1]Input	Send Switch Value - Telegram2	1 Bit	DPT 1.1	R-CT-
3	[1]Input	Send Integer Value - Telegram2	1 Byte	DPT 5.10	R-CT-
4	[1]Input	Switching Status	1 Bit	DPT 1.1	RWCT-
4	[1]Input	Switching Status - Telegram 1	1 Bit	DPT 1.1	RWCT-
5	[1]Input	Switching Status - Telegram 2	1 Bit	DPT 1.1	RWCT-
4	[1]Input	Switching Status - Short Press	1 Bit	DPT 1.1	RWCT-
5	[1]Input	Switching Status - Long Press	1 Bit	DPT 1.1	RWCT-

4	[1]Input	Switching Status - On Press	1 Bit	DPT 1.1	RWCT-
5	[1]Input	Switching Status - On Release	1 Bit	DPT 1.1	RWCT-
2	[1]Input	Temperature	2 Bytes	DPT 9.4	R-CT-
4	[1]Input	Low Temperature Alarm	1 Bit	DPT 1.5	--CT-
5	[1]Input	Temperature High Alarm	1 Bit	DPT 1.5	--CT-
2	[1]Input	Resistor Value	4 Bytes	DPT 14.38	R-CT-
4	[1]Input	Resistor Low Alarm	1 Bit	DPT 1.5	--CT-
5	[1]Input	Resistor High Alarm	1 Bit	DPT 1.5	--CT-
2	[1]Input	RGB Color	3 Bytes	DPT 232.600	--CT-
2	[1]Input	RGB Color Red	1 Byte	DPT 5.10	--CT-
3	[1]Input	RGB Color Green	1 Byte	DPT 5.10	--CT-
4	[1]Input	RGB Color Blue	1 Byte	DPT 5.10	--CT-
2	[1]Input	RGBW Color	6 Bytes	DPT 251,600	--CT-
2	[1]Input	RGBW Color Red	1 Byte	DPT 5.10	--CT-
3	[1]Input	RGBW Color Green	1 Byte	DPT 5.10	--CT-
4	[1]Input	RGBW Color Blue	1 Byte	DPT 5.10	--CT-
5	[1]Input	RGBW Color White	1 Byte	DPT 5.10	--CT-
2	[1]Input	LED Control	1 Bit	DPT 1.1	-WCT-
6	[2]Input	Gate	1 Bit	DPT 1.3	RWCT-
7	[2]Input	Switching	1 Bit	DPT 1.1	RWCT-
9	[2]Input	Switching Status	1 Bit	DPT 1.1	RWCT-
7	[2]Input	Switching	1 Bit	DPT 1.1	RWCT-
8	[2]Input	Dimming	4 Bits	DPT 3.7	R-CT-
9	[2]Input	Switching Status	1 Bit	DPT 1.1	RWCT-
7	[2]Input	Up/Down	1 Bit	DPT 1.8	R-CT-
8	[2]Input	Slat Angle/Stop	1 Bit	DPT 1.8	R-CT-
7	[2]Input	Scene Control	1 Byte	DPT 18.1	--CT-
7	[2]Input	Pulse Counter - 1 Byte	1 Byte	DPT 5.10	R-CT-
7	[2]Input	Pulse Counter - 2 Bytes	2 Bytes	DPT 7.1	R-CT-
7	[2]Input	Pulse Counter - 4 Bytes	4 Bytes	DPT 12.1	R-CT-
8	[2]Input	Reset the Counter	1 Bit	DPT 1.15	-WC--
9	[2]Input	Counter Overflow	1 Bit	DPT 1.5	--CT-
7	[2]Input	Current Mode	1 Byte	DPT 12.1	R-CT-
8	[2]Input	Mode Status	1 Byte	DPT 1.15	-WCT-
7	[2]Input	Send Switch Value	1 Bit	DPT 1.1	R-CT-
7	[2]Input	Send Integer Value	1 Byte	DPT 5.10	R-CT-

7	[2]Input	Send Switch Value - On Press	1 Bit	DPT 1.1	R-CT-
7	[2]Input	Send Integer Value - On Press	1 Byte	DPT 5.10	R-CT-
7	[2]Input	Send Switch Value - Short Press	1 Bit	DPT 1.1	R-CT-
7	[2]Input	Send Integer Value - Short Press	1 Byte	DPT 5.10	R-CT-
7	[2]Input	Send Switch Value - Telegram1	1 Bit	DPT 1.1	R-CT-
7	[2]Input	Send Integer Value - Telegram1	1 Byte	DPT 5.10	R-CT-
8	[2]Input	Send Switch Value - On Release	1 Bit	DPT 1.1	R-CT-
8	[2]Input	Send Integer Value - On Release	1 Byte	DPT 5.10	R-CT-
8	[2]Input	Send Switch Value - Long Press	1 Bit	DPT 1.1	R-CT-
8	[2]Input	Send Integer Value - Long Press	1 Byte	DPT 5.10	R-CT-
8	[2]Input	Send Switch Value - Telegram2	1 Bit	DPT 1.1	R-CT-
8	[2]Input	Send Integer Value - Telegram2	1 Byte	DPT 5.10	R-CT-
9	[2]Input	Switching Status	1 Bit	DPT 1.1	RWCT-
9	[2]Input	Switching Status - Telegram 1	1 Bit	DPT 1.1	RWCT-
10	[2]Input	Switching Status - Telegram 2	1 Bit	DPT 1.1	RWCT-
9	[2]Input	Switching Status - Short Press	1 Bit	DPT 1.1	RWCT-
10	[2]Input	Switching Status - Long Press	1 Bit	DPT 1.1	RWCT-
9	[2]Input	Switching Status - On Press	1 Bit	DPT 1.1	RWCT-
10	[2]Input	Switching Status - On Release	1 Bit	DPT 1.1	RWCT-
7	[2]Input	Temperature	2 Bytes	DPT 9.4	R-CT-
9	[2]Input	Low Temperature Alarm	1 Bit	DPT 1.5	--CT-
10	[2]Input	Temperature High Alarm	1 Bit	DPT 1.5	--CT-
7	[2]Input	Resistor Value	4 Bytes	DPT 14.38	R-CT-
9	[2]Input	Resistor Low Alarm	1 Bit	DPT 1.5	--CT-
10	[2]Input	Resistor High Alarm	1 Bit	DPT 1.5	--CT-
7	[2]Input	RGB Color	3 Bytes	DPT 232.600	--CT-
7	[2]Input	RGB Color Red	1 Byte	DPT 5.10	--CT-
8	[2]Input	RGB Color Green	1 Byte	DPT 5.10	--CT-
9	[2]Input	RGB Color Blue	1 Byte	DPT 5.10	--CT-
7	[2]Input	RGBW Color	6 Bytes	DPT 251,600	--CT-
7	[2]Input	RGBW Color Red	1 Byte	DPT 5.10	--CT-
8	[2]Input	RGBW Color Green	1 Byte	DPT 5.10	--CT-
9	[2]Input	RGBW Color Blue	1 Byte	DPT 5.10	--CT-
10	[2]Input	RGBW Color White	1 Byte	DPT 5.10	--CT-
7	[2]Input	LED Control	1 Bit	DPT 1.1	-WCT-
11	[3]Input	Gate	1 Bit	DPT 1.3	RWCT-

12	[3]Input	Switching	1 Bit	DPT 1.1	RWCT-
14	[3]Input	Switching Status	1 Bit	DPT 1.1	RWCT-
12	[3]Input	Switching	1 Bit	DPT 1.1	RWCT-
13	[3]Input	Dimming	4 Bits	DPT 3.7	R-CT-
14	[3]Input	Switching Status	1 Bit	DPT 1.1	RWCT-
12	[3]Input	Up/Down	1 Bit	DPT 1.8	R-CT-
13	[3]Input	Slat Angle/Stop	1 Bit	DPT 1.8	R-CT-
12	[3]Input	Scene Control	1 Byte	DPT 18.1	--CT-
12	[3]Input	Pulse Counter - 1 Byte	1 Byte	DPT 5.10	R-CT-
12	[3]Input	Pulse Counter - 2 Bytes	2 Bytes	DPT 7.1	R-CT-
12	[3]Input	Pulse Counter - 4 Bytes	4 Bytes	DPT 12.1	R-CT-
13	[3]Input	Reset the Counter	1 Bit	DPT 1.15	-WC--
14	[3]Input	Counter Overflow	1 Bit	DPT 1.5	--CT-
12	[3]Input	Current Mode	1 Byte	DPT 12.1	R-CT-
13	[3]Input	Mode Status	1 Byte	DPT 1.15	-WCT-
12	[3]Input	Send Switch Value	1 Bit	DPT 1.1	R-CT-
12	[3]Input	Send Integer Value	1 Byte	DPT 5.10	R-CT-
12	[3]Input	Send Switch Value - On Press	1 Bit	DPT 1.1	R-CT-
12	[3]Input	Send Integer Value - On Press	1 Byte	DPT 5.10	R-CT-
12	[3]Input	Send Switch Value - Short Press	1 Bit	DPT 1.1	R-CT-
12	[3]Input	Send Integer Value - Short Press	1 Byte	DPT 5.10	R-CT-
12	[3]Input	Send Switch Value - Telegram1	1 Bit	DPT 1.1	R-CT-
12	[3]Input	Send Integer Value - Telegram1	1 Byte	DPT 5.10	R-CT-
13	[3]Input	Send Switch Value - On Release	1 Bit	DPT 1.1	R-CT-
13	[3]Input	Send Integer Value - On Release	1 Byte	DPT 5.10	R-CT-
13	[3]Input	Send Switch Value - Long Press	1 Bit	DPT 1.1	R-CT-
13	[3]Input	Send Integer Value - Long Press	1 Byte	DPT 5.10	R-CT-
13	[3]Input	Send Switch Value - Telegram2	1 Bit	DPT 1.1	R-CT-
13	[3]Input	Send Integer Value - Telegram2	1 Byte	DPT 5.10	R-CT-
14	[3]Input	Switching Status	1 Bit	DPT 1.1	RWCT-
14	[3]Input	Switching Status - Telegram 1	1 Bit	DPT 1.1	RWCT-
15	[3]Input	Switching Status - Telegram 2	1 Bit	DPT 1.1	RWCT-
14	[3]Input	Switching Status - Short Press	1 Bit	DPT 1.1	RWCT-
15	[3]Input	Switching Status - Long Press	1 Bit	DPT 1.1	RWCT-
14	[3]Input	Switching Status - On Press	1 Bit	DPT 1.1	RWCT-
15	[3]Input	Switching Status - On Release	1 Bit	DPT 1.1	RWCT-
12	[3]Input	Temperature	2 Bytes	DPT 9.4	R-CT-

14	[3]Input	Low Temperature Alarm	1 Bit	DPT 1.5	--CT-
15	[3]Input	Temperature High Alarm	1 Bit	DPT 1.5	--CT-
12	[3]Input	Resistor Value	4 Bytes	DPT 14.38	R-CT-
14	[3]Input	Resistor Low Alarm	1 Bit	DPT 1.5	--CT-
15	[3]Input	Resistor High Alarm	1 Bit	DPT 1.5	--CT-
12	[3]Input	RGB Color	3 Bytes	DPT 232.600	--CT-
12	[3]Input	RGB Color Red	1 Byte	DPT 5.10	--CT-
13	[3]Input	RGB Color Green	1 Byte	DPT 5.10	--CT-
14	[3]Input	RGB Color Blue	1 Byte	DPT 5.10	--CT-
12	[3]Input	RGBW Color	6 Bytes	DPT 251,600	--CT-
12	[3]Input	RGBW Color Red	1 Byte	DPT 5.10	--CT-
13	[3]Input	RGBW Color Green	1 Byte	DPT 5.10	--CT-
14	[3]Input	RGBW Color Blue	1 Byte	DPT 5.10	--CT-
15	[3]Input	RGBW Color White	1 Byte	DPT 5.10	--CT-
12	[3]Input	LED Control	1 Bit	DPT 1.1	-WCT-
16	[4]Input	Gate	1 Bit	DPT 1.3	RWCT-
17	[4]Input	Switching	1 Bit	DPT 1.1	RWCT-
19	[4]Input	Switching Status	1 Bit	DPT 1.1	RWCT-
17	[4]Input	Switching	1 Bit	DPT 1.1	RWCT-
18	[4]Input	Dimming	4 Bits	DPT 3.7	R-CT-
19	[4]Input	Switching Status	1 Bit	DPT 1.1	RWCT-
17	[4]Input	Up/Down	1 Bit	DPT 1.8	R-CT-
18	[4]Input	Slat Angle/Stop	1 Bit	DPT 1.8	R-CT-
17	[4]Input	Scene Control	1 Byte	DPT 18.1	--CT-
17	[4]Input	Pulse Counter - 1 Byte	1 Byte	DPT 5.10	R-CT-
17	[4]Input	Pulse Counter - 2 Bytes	2 Bytes	DPT 7.1	R-CT-
17	[4]Input	Pulse Counter - 4 Bytes	4 Bytes	DPT 12.1	R-CT-
18	[4]Input	Reset the Counter	1 Bit	DPT 1.15	-WC--
19	[4]Input	Counter Overflow	1 Bit	DPT 1.5	--CT-
17	[4]Input	Current Mode	1 Byte	DPT 12.1	R-CT-
18	[4]Input	Mode Status	1 Byte	DPT 1.15	-WCT-
17	[4]Input	Send Switch Value	1 Bit	DPT 1.1	R-CT-
17	[4]Input	Send Integer Value	1 Byte	DPT 5.10	R-CT-
17	[4]Input	Send Switch Value - On Press	1 Bit	DPT 1.1	R-CT-
17	[4]Input	Send Integer Value - On Press	1 Byte	DPT 5.10	R-CT-
17	[4]Input	Send Switch Value - Short Press	1 Bit	DPT 1.1	R-CT-

17	[4]Input	Send Integer Value - Short Press	1 Byte	DPT 5.10	R-CT-
17	[4]Input	Send Switch Value - Telegram1	1 Bit	DPT 1.1	R-CT-
17	[4]Input	Send Integer Value - Telegram1	1 Byte	DPT 5.10	R-CT-
18	[4]Input	Send Switch Value - On Release	1 Bit	DPT 1.1	R-CT-
18	[4]Input	Send Integer Value - On Release	1 Byte	DPT 5.10	R-CT-
18	[4]Input	Send Switch Value - Long Press	1 Bit	DPT 1.1	R-CT-
18	[4]Input	Send Integer Value - Long Press	1 Byte	DPT 5.10	R-CT-
18	[4]Input	Send Switch Value - Telegram2	1 Bit	DPT 1.1	R-CT-
18	[4]Input	Send Integer Value - Telegram2	1 Byte	DPT 5.10	R-CT-
19	[4]Input	Switching Status	1 Bit	DPT 1.1	RWCT-
19	[4]Input	Switching Status - Telegram 1	1 Bit	DPT 1.1	RWCT-
20	[4]Input	Switching Status - Telegram 2	1 Bit	DPT 1.1	RWCT-
19	[4]Input	Switching Status - Short Press	1 Bit	DPT 1.1	RWCT-
20	[4]Input	Switching Status - Long Press	1 Bit	DPT 1.1	RWCT-
19	[4]Input	Switching Status - On Press	1 Bit	DPT 1.1	RWCT-
20	[4]Input	Switching Status - On Release	1 Bit	DPT 1.1	RWCT-
17	[4]Input	Temperature	2 Bytes	DPT 9.4	R-CT-
19	[4]Input	Low Temperature Alarm	1 Bit	DPT 1.5	--CT-
20	[4]Input	Temperature High Alarm	1 Bit	DPT 1.5	--CT-
17	[4]Input	Resistor Value	4 Bytes	DPT 14.38	R-CT-
19	[4]Input	Resistor Low Alarm	1 Bit	DPT 1.5	--CT-
20	[4]Input	Resistor High Alarm	1 Bit	DPT 1.5	--CT-
17	[4]Input	RGB Color	3 Bytes	DPT 232.600	--CT-
17	[4]Input	RGB Color Red	1 Byte	DPT 5.10	--CT-
18	[4]Input	RGB Color Green	1 Byte	DPT 5.10	--CT-
19	[4]Input	RGB Color Blue	1 Byte	DPT 5.10	--CT-
17	[4]Input	RGBW Color	6 Bytes	DPT 251,600	--CT-
17	[4]Input	RGBW Color Red	1 Byte	DPT 5.10	--CT-
18	[4]Input	RGBW Color Green	1 Byte	DPT 5.10	--CT-
19	[4]Input	RGBW Color Blue	1 Byte	DPT 5.10	--CT-
20	[4]Input	RGBW Color White	1 Byte	DPT 5.10	--CT-
17	[4]Input	LED Control	1 Bit	DPT 1.1	-WCT-
21	[5]Input	Gate	1 Bit	DPT 1.3	RWCT-
22	[5]Input	Switching	1 Bit	DPT 1.1	RWCT-
24	[5]Input	Switching Status	1 Bit	DPT 1.1	RWCT-
22	[5]Input	Switching	1 Bit	DPT 1.1	RWCT-

23	[5]Input	Dimming	4 Bits	DPT 3.7	R-CT-
24	[5]Input	Switching Status	1 Bit	DPT 1.1	RWCT-
22	[5]Input	Up/Down	1 Bit	DPT 1.8	R-CT-
23	[5]Input	Slat Angle/Stop	1 Bit	DPT 1.8	R-CT-
22	[5]Input	Scene Control	1 Byte	DPT 18.1	--CT-
22	[5]Input	Pulse Counter - 1 Byte	1 Byte	DPT 5.10	R-CT-
22	[5]Input	Pulse Counter - 2 Bytes	2 Bytes	DPT 7.1	R-CT-
22	[5]Input	Pulse Counter - 4 Bytes	4 Bytes	DPT 12.1	R-CT-
23	[5]Input	Reset the Counter	1 Bit	DPT 1.15	-WC--
24	[5]Input	Counter Overflow	1 Bit	DPT 1.5	--CT-
22	[5]Input	Current Mode	1 Byte	DPT 12.1	R-CT-
23	[5]Input	Mode Status	1 Byte	DPT 1.15	-WCT-
22	[5]Input	Send Switch Value	1 Bit	DPT 1.1	R-CT-
22	[5]Input	Send Integer Value	1 Byte	DPT 5.10	R-CT-
22	[5]Input	Send Switch Value - On Press	1 Bit	DPT 1.1	R-CT-
22	[5]Input	Send Integer Value - On Press	1 Byte	DPT 5.10	R-CT-
22	[5]Input	Send Switch Value - Short Press	1 Bit	DPT 1.1	R-CT-
22	[5]Input	Send Integer Value - Short Press	1 Byte	DPT 5.10	R-CT-
22	[5]Input	Send Switch Value - Telegram1	1 Bit	DPT 1.1	R-CT-
22	[5]Input	Send Integer Value - Telegram1	1 Byte	DPT 5.10	R-CT-
23	[5]Input	Send Switch Value - On Release	1 Bit	DPT 1.1	R-CT-
23	[5]Input	Send Integer Value - On Release	1 Byte	DPT 5.10	R-CT-
23	[5]Input	Send Switch Value - Long Press	1 Bit	DPT 1.1	R-CT-
23	[5]Input	Send Integer Value - Long Press	1 Byte	DPT 5.10	R-CT-
23	[5]Input	Send Switch Value - Telegram2	1 Bit	DPT 1.1	R-CT-
23	[5]Input	Send Integer Value - Telegram2	1 Byte	DPT 5.10	R-CT-
24	[5]Input	Switching Status	1 Bit	DPT 1.1	RWCT-
24	[5]Input	Switching Status - Telegram 1	1 Bit	DPT 1.1	RWCT-
25	[5]Input	Switching Status - Telegram 2	1 Bit	DPT 1.1	RWCT-
24	[5]Input	Switching Status - Short Press	1 Bit	DPT 1.1	RWCT-
25	[5]Input	Switching Status - Long Press	1 Bit	DPT 1.1	RWCT-
24	[5]Input	Switching Status - On Press	1 Bit	DPT 1.1	RWCT-
25	[5]Input	Switching Status - On Release	1 Bit	DPT 1.1	RWCT-
22	[5]Input	Temperature	2 Bytes	DPT 9.4	R-CT-
24	[5]Input	Low Temperature Alarm	1 Bit	DPT 1.5	--CT-
25	[5]Input	Temperature High Alarm	1 Bit	DPT 1.5	--CT-
22	[5]Input	Resistor Value	4 Bytes	DPT 14.38	R-CT-

24	[5]Input	Resistor Low Alarm	1 Bit	DPT 1.5	--CT-
25	[5]Input	Resistor High Alarm	1 Bit	DPT 1.5	--CT-
22	[5]Input	RGB Color	3 Bytes	DPT 232.600	--CT-
22	[5]Input	RGB Color Red	1 Byte	DPT 5.10	--CT-
23	[5]Input	RGB Color Green	1 Byte	DPT 5.10	--CT-
24	[5]Input	RGB Color Blue	1 Byte	DPT 5.10	--CT-
22	[5]Input	RGBW Color	6 Bytes	DPT 251,600	--CT-
22	[5]Input	RGBW Color Red	1 Byte	DPT 5.10	--CT-
23	[5]Input	RGBW Color Green	1 Byte	DPT 5.10	--CT-
24	[5]Input	RGBW Color Blue	1 Byte	DPT 5.10	--CT-
25	[5]Input	RGBW Color White	1 Byte	DPT 5.10	--CT-
22	[5]Input	LED Control	1 Bit	DPT 1.1	-WCT-
26	[6]Input	Gate	1 Bit	DPT 1.3	RWCT-
27	[6]Input	Switching	1 Bit	DPT 1.1	RWCT-
29	[6]Input	Switching Status	1 Bit	DPT 1.1	RWCT-
27	[6]Input	Switching	1 Bit	DPT 1.1	RWCT-
28	[6]Input	Dimming	4 Bits	DPT 3.7	R-CT-
29	[6]Input	Switching Status	1 Bit	DPT 1.1	RWCT-
27	[6]Input	Up/Down	1 Bit	DPT 1.8	R-CT-
28	[6]Input	Slat Angle/Stop	1 Bit	DPT 1.8	R-CT-
27	[6]Input	Scene Control	1 Byte	DPT 18.1	--CT-
27	[6]Input	Pulse Counter - 1 Byte	1 Byte	DPT 5.10	R-CT-
27	[6]Input	Pulse Counter - 2 Bytes	2 Bytes	DPT 7.1	R-CT-
27	[6]Input	Pulse Counter - 4 Bytes	4 Bytes	DPT 12.1	R-CT-
28	[6]Input	Reset the Counter	1 Bit	DPT 1.15	-WC--
29	[6]Input	Counter Overflow	1 Bit	DPT 1.5	--CT-
27	[6]Input	Current Mode	1 Byte	DPT 12.1	R-CT-
28	[6]Input	Mode Status	1 Byte	DPT 1.15	-WCT-
27	[6]Input	Send Switch Value	1 Bit	DPT 1.1	R-CT-
27	[6]Input	Send Integer Value	1 Byte	DPT 5.10	R-CT-
27	[6]Input	Send Switch Value - On Press	1 Bit	DPT 1.1	R-CT-
27	[6]Input	Send Integer Value - On Press	1 Byte	DPT 5.10	R-CT-
27	[6]Input	Send Switch Value - Short Press	1 Bit	DPT 1.1	R-CT-
27	[6]Input	Send Integer Value - Short Press	1 Byte	DPT 5.10	R-CT-
27	[6]Input	Send Switch Value - Telegram1	1 Bit	DPT 1.1	R-CT-
27	[6]Input	Send Integer Value - Telegram1	1 Byte	DPT 5.10	R-CT-

28	[6]Input	Send Switch Value - On Release	1 Bit	DPT 1.1	R-CT-
28	[6]Input	Send Integer Value - On Release	1 Byte	DPT 5.10	R-CT-
28	[6]Input	Send Switch Value - Long Press	1 Bit	DPT 1.1	R-CT-
28	[6]Input	Send Integer Value - Long Press	1 Byte	DPT 5.10	R-CT-
28	[6]Input	Send Switch Value - Telegram2	1 Bit	DPT 1.1	R-CT-
28	[6]Input	Send Integer Value - Telegram2	1 Byte	DPT 5.10	R-CT-
29	[6]Input	Switching Status	1 Bit	DPT 1.1	RWCT-
29	[6]Input	Switching Status - Telegram 1	1 Bit	DPT 1.1	RWCT-
30	[6]Input	Switching Status - Telegram 2	1 Bit	DPT 1.1	RWCT-
29	[6]Input	Switching Status - Short Press	1 Bit	DPT 1.1	RWCT-
30	[6]Input	Switching Status - Long Press	1 Bit	DPT 1.1	RWCT-
29	[6]Input	Switching Status - On Press	1 Bit	DPT 1.1	RWCT-
30	[6]Input	Switching Status - On Release	1 Bit	DPT 1.1	RWCT-
27	[6]Input	Temperature	2 Bytes	DPT 9.4	R-CT-
29	[6]Input	Low Temperature Alarm	1 Bit	DPT 1.5	--CT-
30	[6]Input	Temperature High Alarm	1 Bit	DPT 1.5	--CT-
27	[6]Input	Resistor Value	4 Bytes	DPT 14.38	R-CT-
29	[6]Input	Resistor Low Alarm	1 Bit	DPT 1.5	--CT-
30	[6]Input	Resistor High Alarm	1 Bit	DPT 1.5	--CT-
27	[6]Input	RGB Color	3 Bytes	DPT 232.600	--CT-
27	[6]Input	RGB Color Red	1 Byte	DPT 5.10	--CT-
28	[6]Input	RGB Color Green	1 Byte	DPT 5.10	--CT-
29	[6]Input	RGB Color Blue	1 Byte	DPT 5.10	--CT-
27	[6]Input	RGBW Color	6 Bytes	DPT 251,600	--CT-
27	[6]Input	RGBW Color Red	1 Byte	DPT 5.10	--CT-
28	[6]Input	RGBW Color Green	1 Byte	DPT 5.10	--CT-
29	[6]Input	RGBW Color Blue	1 Byte	DPT 5.10	--CT-
30	[6]Input	RGBW Color White	1 Byte	DPT 5.10	--CT-
27	[6]Input	LED Control	1 Bit	DPT 1.1	-WCT-
31	[7]Input	Gate	1 Bit	DPT 1.3	RWCT-
32	[7]Input	Switching	1 Bit	DPT 1.1	RWCT-
34	[7]Input	Switching Status	1 Bit	DPT 1.1	RWCT-
32	[7]Input	Switching	1 Bit	DPT 1.1	RWCT-
33	[7]Input	Dimming	4 Bits	DPT 3.7	R-CT-
34	[7]Input	Switching Status	1 Bit	DPT 1.1	RWCT-
32	[7]Input	Up/Down	1 Bit	DPT 1.8	R-CT-

33	[7]Input	Slat Angle/Stop	1 Bit	DPT 1.8	R-CT-
32	[7]Input	Scene Control	1 Byte	DPT 18.1	--CT-
32	[7]Input	Pulse Counter - 1 Byte	1 Byte	DPT 5.10	R-CT-
32	[7]Input	Pulse Counter - 2 Bytes	2 Bytes	DPT 7.1	R-CT-
32	[7]Input	Pulse Counter - 4 Bytes	4 Bytes	DPT 12.1	R-CT-
33	[7]Input	Reset the Counter	1 Bit	DPT 1.15	-WC--
34	[7]Input	Counter Overflow	1 Bit	DPT 1.5	--CT-
32	[7]Input	Current Mode	1 Byte	DPT 12.1	R-CT-
33	[7]Input	Mode Status	1 Byte	DPT 1.15	-WCT-
32	[7]Input	Send Switch Value	1 Bit	DPT 1.1	R-CT-
32	[7]Input	Send Integer Value	1 Byte	DPT 5.10	R-CT-
32	[7]Input	Send Switch Value - On Press	1 Bit	DPT 1.1	R-CT-
32	[7]Input	Send Integer Value - On Press	1 Byte	DPT 5.10	R-CT-
32	[7]Input	Send Switch Value - Short Press	1 Bit	DPT 1.1	R-CT-
32	[7]Input	Send Integer Value - Short Press	1 Byte	DPT 5.10	R-CT-
32	[7]Input	Send Switch Value - Telegram1	1 Bit	DPT 1.1	R-CT-
32	[7]Input	Send Integer Value - Telegram1	1 Byte	DPT 5.10	R-CT-
33	[7]Input	Send Switch Value - On Release	1 Bit	DPT 1.1	R-CT-
33	[7]Input	Send Integer Value - On Release	1 Byte	DPT 5.10	R-CT-
33	[7]Input	Send Switch Value - Long Press	1 Bit	DPT 1.1	R-CT-
33	[7]Input	Send Integer Value - Long Press	1 Byte	DPT 5.10	R-CT-
33	[7]Input	Send Switch Value - Telegram2	1 Bit	DPT 1.1	R-CT-
33	[7]Input	Send Integer Value - Telegram2	1 Byte	DPT 5.10	R-CT-
34	[7]Input	Switching Status	1 Bit	DPT 1.1	RWCT-
34	[7]Input	Switching Status - Telegram 1	1 Bit	DPT 1.1	RWCT-
35	[7]Input	Switching Status - Telegram 2	1 Bit	DPT 1.1	RWCT-
34	[7]Input	Switching Status - Short Press	1 Bit	DPT 1.1	RWCT-
35	[7]Input	Switching Status - Long Press	1 Bit	DPT 1.1	RWCT-
34	[7]Input	Switching Status - On Press	1 Bit	DPT 1.1	RWCT-
35	[7]Input	Switching Status - On Release	1 Bit	DPT 1.1	RWCT-
32	[7]Input	Temperature	2 Bytes	DPT 9.4	R-CT-
34	[7]Input	Low Temperature Alarm	1 Bit	DPT 1.5	--CT-
35	[7]Input	Temperature High Alarm	1 Bit	DPT 1.5	--CT-
32	[7]Input	Resistor Value	4 Bytes	DPT 14.38	R-CT-
34	[7]Input	Resistor Low Alarm	1 Bit	DPT 1.5	--CT-
35	[7]Input	Resistor High Alarm	1 Bit	DPT 1.5	--CT-

32	[7]Input	RGB Color	3 Bytes	DPT 232,600	--CT-
32	[7]Input	RGB Color Red	1 Byte	DPT 5.10	--CT-
33	[7]Input	RGB Color Green	1 Byte	DPT 5.10	--CT-
34	[7]Input	RGB Color Blue	1 Byte	DPT 5.10	--CT-
32	[7]Input	RGBW Color	6 Bytes	DPT 251,600	--CT-
32	[7]Input	RGBW Color Red	1 Byte	DPT 5.10	--CT-
33	[7]Input	RGBW Color Green	1 Byte	DPT 5.10	--CT-
34	[7]Input	RGBW Color Blue	1 Byte	DPT 5.10	--CT-
35	[7]Input	RGBW Color White	1 Byte	DPT 5.10	--CT-
32	[7]Input	LED Control	1 Bit	DPT 1.1	-WCT-
36	[8]Input	Gate	1 Bit	DPT 1.3	RWCT-
37	[8]Input	Switching	1 Bit	DPT 1.1	RWCT-
39	[8]Input	Switching Status	1 Bit	DPT 1.1	RWCT-
37	[8]Input	Switching	1 Bit	DPT 1.1	RWCT-
38	[8]Input	Dimming	4 Bits	DPT 3.7	R-CT-
39	[8]Input	Switching Status	1 Bit	DPT 1.1	RWCT-
37	[8]Input	Up/Down	1 Bit	DPT 1.8	R-CT-
38	[8]Input	Slat Angle/Stop	1 Bit	DPT 1.8	R-CT-
37	[8]Input	Scene Control	1 Byte	DPT 18.1	--CT-
37	[8]Input	Pulse Counter - 1 Byte	1 Byte	DPT 5.10	R-CT-
37	[8]Input	Pulse Counter - 2 Bytes	2 Bytes	DPT 7.1	R-CT-
37	[8]Input	Pulse Counter - 4 Bytes	4 Bytes	DPT 12.1	R-CT-
38	[8]Input	Reset the Counter	1 Bit	DPT 1.15	-WC--
39	[8]Input	Counter Overflow	1 Bit	DPT 1.5	--CT-
37	[8]Input	Current Mode	1 Byte	DPT 12.1	R-CT-
38	[8]Input	Mode Status	1 Byte	DPT 1.15	-WCT-
37	[8]Input	Send Switch Value	1 Bit	DPT 1.1	R-CT-
37	[8]Input	Send Integer Value	1 Byte	DPT 5.10	R-CT-
37	[8]Input	Send Switch Value - On Press	1 Bit	DPT 1.1	R-CT-
37	[8]Input	Send Integer Value - On Press	1 Byte	DPT 5.10	R-CT-
37	[8]Input	Send Switch Value - Short Press	1 Bit	DPT 1.1	R-CT-
37	[8]Input	Send Integer Value - Short Press	1 Byte	DPT 5.10	R-CT-
37	[8]Input	Send Switch Value - Telegram1	1 Bit	DPT 1.1	R-CT-
37	[8]Input	Send Integer Value - Telegram1	1 Byte	DPT 5.10	R-CT-
38	[8]Input	Send Switch Value - On Release	1 Bit	DPT 1.1	R-CT-
38	[8]Input	Send Integer Value - On Release	1 Byte	DPT 5.10	R-CT-

38	[8]Input	Send Switch Value - Long Press	1 Bit	DPT 1.1	R-CT-
38	[8]Input	Send Integer Value - Long Press	1 Byte	DPT 5.10	R-CT-
38	[8]Input	Send Switch Value - Telegram2	1 Bit	DPT 1.1	R-CT-
38	[8]Input	Send Integer Value - Telegram2	1 Byte	DPT 5.10	R-CT-
39	[8]Input	Switching Status	1 Bit	DPT 1.1	RWCT-
39	[8]Input	Switching Status - Telegram 1	1 Bit	DPT 1.1	RWCT-
40	[8]Input	Switching Status - Telegram 2	1 Bit	DPT 1.1	RWCT-
39	[8]Input	Switching Status - Short Press	1 Bit	DPT 1.1	RWCT-
40	[8]Input	Switching Status - Long Press	1 Bit	DPT 1.1	RWCT-
39	[8]Input	Switching Status - On Press	1 Bit	DPT 1.1	RWCT-
40	[8]Input	Switching Status - On Release	1 Bit	DPT 1.1	RWCT-
37	[8]Input	Temperature	2 Bytes	DPT 9.4	R-CT-
39	[8]Input	Low Temperature Alarm	1 Bit	DPT 1.5	--CT-
40	[8]Input	Temperature High Alarm	1 Bit	DPT 1.5	--CT-
37	[8]Input	Resistor Value	4 Bytes	DPT 14.38	R-CT-
39	[8]Input	Resistor Low Alarm	1 Bit	DPT 1.5	--CT-
40	[8]Input	Resistor High Alarm	1 Bit	DPT 1.5	--CT-
37	[8]Input	RGB Color	3 Bytes	DPT 232.600	--CT-
37	[8]Input	RGB Color Red	1 Byte	DPT 5.10	--CT-
38	[8]Input	RGB Color Green	1 Byte	DPT 5.10	--CT-
39	[8]Input	RGB Color Blue	1 Byte	DPT 5.10	--CT-
37	[8]Input	RGBW Color	6 Bytes	DPT 251,600	--CT-
37	[8]Input	RGBW Color Red	1 Byte	DPT 5.10	--CT-
38	[8]Input	RGBW Color Green	1 Byte	DPT 5.10	--CT-
39	[8]Input	RGBW Color Blue	1 Byte	DPT 5.10	--CT-
40	[8]Input	RGBW Color White	1 Byte	DPT 5.10	--CT-
37	[8]Input	LED Control	1 Bit	DPT 1.1	-WCT-
41	[1]Logic	Input 1	1 Bit	DPT 1.2	-WC--
42	[1]Logic	Input 2	1 Bit	DPT 1.2	-WC--
43	[1]Logic	Input 3	1 Bit	DPT 1.2	-WC--
44	[1]Logic	Input 4	1 Bit	DPT 1.2	-WC--
45	[1]Logic	Output	1 Bit	DPT 1.2	R-CT-
46	[1]Logic	Gate	1 Bit	DPT 1.2	RWCT-
47	[2]Logic	Input 1	1 Bit	DPT 1.2	-WC--
48	[2]Logic	Input 2	1 Bit	DPT 1.2	-WC--
49	[2]Logic	Input 3	1 Bit	DPT 1.2	-WC--

49	[2]Logic	Input 4	1 Bit	DPT 1.2	-WC--
51	[2]Logic	Output	1 Bit	DPT 1.2	R-CT-
52	[2]Logic	Gate	1 Bit	DPT 1.2	RWCT-
53	[3]Logic	Input 1	1 Bit	DPT 1.2	-WC--
54	[3]Logic	Input 2	1 Bit	DPT 1.2	-WC--
55	[3]Logic	Input 3	1 Bit	DPT 1.2	-WC--
54	[3]Logic	Input 4	1 Bit	DPT 1.2	-WC--
57	[3]Logic	Output	1 Bit	DPT 1.2	R-CT-
58	[3]Logic	Gate	1 Bit	DPT 1.2	RWCT-
59	[4]Logic	Input 1	1 Bit	DPT 1.2	-WC--
60	[4]Logic	Input 2	1 Bit	DPT 1.2	-WC--
61	[4]Logic	Input 3	1 Bit	DPT 1.2	-WC--
59	[4]Logic	Input 4	1 Bit	DPT 1.2	-WC--
63	[4]Logic	Output	1 Bit	DPT 1.2	R-CT-
64	[4]Logic	Gate	1 Bit	DPT 1.2	RWCT-
65	[5]Logic	Input 1	1 Bit	DPT 1.2	-WC--
66	[5]Logic	Input 2	1 Bit	DPT 1.2	-WC--
67	[5]Logic	Input 3	1 Bit	DPT 1.2	-WC--
64	[5]Logic	Input 4	1 Bit	DPT 1.2	-WC--
69	[5]Logic	Output	1 Bit	DPT 1.2	R-CT-
70	[5]Logic	Gate	1 Bit	DPT 1.2	RWCT-
71	[6]Logic	Input 1	1 Bit	DPT 1.2	-WC--
72	[6]Logic	Input 2	1 Bit	DPT 1.2	-WC--
73	[6]Logic	Input 3	1 Bit	DPT 1.2	-WC--
69	[6]Logic	Input 4	1 Bit	DPT 1.2	-WC--
75	[6]Logic	Output	1 Bit	DPT 1.2	R-CT-
76	[6]Logic	Gate	1 Bit	DPT 1.2	RWCT-
77	[7]Logic	Input 1	1 Bit	DPT 1.2	-WC--
78	[7]Logic	Input 2	1 Bit	DPT 1.2	-WC--
79	[7]Logic	Input 3	1 Bit	DPT 1.2	-WC--
74	[7]Logic	Input 4	1 Bit	DPT 1.2	-WC--
81	[7]Logic	Output	1 Bit	DPT 1.2	R-CT-
82	[7]Logic	Gate	1 Bit	DPT 1.2	RWCT-
83	[8]Logic	Input 1	1 Bit	DPT 1.2	-WC--
84	[8]Logic	Input 2	1 Bit	DPT 1.2	-WC--
85	[8]Logic	Input 3	1 Bit	DPT 1.2	-WC--
79	[8]Logic	Input 4	1 Bit	DPT 1.2	-WC--

87	[8]Logic	Output	1 Bit	DPT 1.2	R-CT-
88	[8]Logic	Gate	1 Bit	DPT 1.2	RWCT-
89	[9]Logic	Input 1	1 Bit	DPT 1.2	-WC--
90	[9]Logic	Input 2	1 Bit	DPT 1.2	-WC--
91	[9]Logic	Input 3	1 Bit	DPT 1.2	-WC--
84	[9]Logic	Input 4	1 Bit	DPT 1.2	-WC--
93	[9]Logic	Output	1 Bit	DPT 1.2	R-CT-
94	[9]Logic	Gate	1 Bit	DPT 1.2	RWCT-
95	[10]Logic	Input 1	1 Bit	DPT 1.2	-WC--
96	[10]Logic	Input 2	1 Bit	DPT 1.2	-WC--
97	[10]Logic	Input 3	1 Bit	DPT 1.2	-WC--
89	[10]Logic	Input 4	1 Bit	DPT 1.2	-WC--
99	[10]Logic	Output	1 Bit	DPT 1.2	R-CT-
100	[10]Logic	Gate	1 Bit	DPT 1.2	RWCT-
101	Alive Beacon	Alive Beacon	1 Bit	DPT 1.1	--CT-

8 Manual Operation

8.1 Reset to Factory Settings

Enervon Universal Interface supports resetting all parameters, the application loaded via ETS, and operating settings to their factory default state. This process is used when the device needs to be re-projected or a clean installation is required after a malfunction/incorrect configuration.

To restore the device to factory settings, follow these steps.

1- Disconnect the device from the KNX bus (cut the power).

2- With the device powered off, press and hold the programming button.

3- Connect the device to the KNX line (power it up) and continue pressing the programming button.

4- After 10 seconds, the device will have returned to factory settings.

8.2 Entering Programming Mode Using the Inputs

If it is difficult to access the product's programming button, you can also enter programming mode using the input buttons.

Follow the steps below to enter programming mode.

1- Hold down the 1st input for 5 seconds.

2- Without releasing the first input, press the second input 5 times.

3- The device will enter programming mode.

9 Enabling KNX Secure

KNX DATA Secure ensures that telegrams between Enervon KNX devices and the KNX bus are encrypted and protected against unauthorized access. The following steps are an example process for enabling Secure on an Enervon KNX device within ETS.

9.1 Enabling Secure on a Project Basis

1. **Create a new ETS project** or open an existing project.
2. Right-click on the project to open the **"Properties"** window.
3. Go to the **Security** tab.
4. Set the "KNX Data Secure" setting to **"Enabled."**
5. Set a **Project Password** for the project:
    - Confirm the password by entering it again.
    - This password protects the configuration of all Secure devices within the project.
    - Store the password in a secure location; if forgotten, the project cannot be reopened or recovered.

Note: In projects without a defined project password, devices operate only in **KNX Plain (unencrypted)** mode; Secure functions are disabled.

9.2 Marking the Device as Secure

1. Find the relevant Enervon device in the ETS project tree.
2. Open the **Security** section in the device properties window.
3. Enable Secure mode by setting the device mode to an option such as **"Secure"** or **"Encrypted communication"**.
4. If desired, Secure communication can be selected only for specific group addresses:
    - Mark the "Communication type" field as **"Secure"** for important control or status addresses.
    - For less critical telegrams, "Plain" can be left as is.

9.3 Entering FDSK (Factory Default Setup Key) Information into ETS

Each Enervon KNX device is labeled with **an FDSK** (Factory Default Setup Key) at the factory. The FDSK verifies the device's identity during KNX Data Secure commissioning.

1. Locate **the FDSK label** on the device:
    - The label contains both **the text "FDSK"** and **a QR code**.
2. In ETS:
    - Locate the "Add Device Certificate" field in the device's security section.
    - **Manually enter** the FDSK code here or **scan the QR code**, depending on the capabilities offered by ETS.
3. If there are multiple Secure devices in a project:
    - The FDSK information for all devices can be pre-registered in a central list, such as **"Project → Security / Device Security"**.
    - This way, during the first download, ETS automatically uses the relevant device's FDSK.

Recommendation: The FDSK label on the device should be removed after commissioning and stored securely with the project files.

9.4 First Download Process as Secure (Download)

1. The device must be connected to the KNX bus and have a physical address assigned.
2. Right-click on the relevant device in ETS and start the **"Download"** command (or just select "Application" download).
3. If the FDSK has not been entered before:
    - ETS displays a warning window during the first Secure download and asks you **to enter the FDSK code** or **scan the QR code**.
    - Once the correct FDSK is entered, the process continues and Secure keys are generated for the device.
4. When the download is complete:
    - The default keys inside the device **are replaced** by ETS **with new project keys**.
    - The device now communicates with the project only in **encrypted (Secure)** mode.

Note: The FDSK is not required again unless the device is reset to factory settings. The FDSK must be used again in cases where Secure keys need to be reassigned (e.g., if the device will be used in another project).

9.5 Checking the Secure Status

- In the ETS project tree, a **lock icon** or similar security indicator is usually displayed next to the relevant device.
- A similar indicator is also present for addresses marked as Secure in the group address list.
- If a device or group address is marked as Secure but the FDSK has not been entered, ETS will display an error or warning message during download.

9.6 Points to Note

- **Secure and Plain devices** can coexist in the same project; however, since telegrams from Secure devices are encrypted, Plain devices cannot process them. This should be taken into account when designing the topology and functions.
- Project passwords and FDSK tags should be treated as **confidential information** and kept inaccessible to unauthorized persons.
- When moving the project to another computer, ensure that the **security database** is backed up along with the ETS project. Secure devices cannot be reprogrammed without security data.

ENERVON TEKNOLOJİ LTD ŞTİ

FSM Mah. Poligon Cad. Buyaka Kule 3,
Kat:3 D:21 34771 Ümraniye/İSTANBUL/TÜRKİYE

Phone: +90 216 759 00 52

Mail: info@enervon.com.tr

Website: www.enervon.com.tr

Scan the QR Code
for visit website